INSTRUCTION MANUAL

STORAGE OSCILLOSCOPE

MODEL 5516ST

Kikusui
INTERNATIONAL CORP.

INSTRUCTION MANUAL

STORAGE OSCILLOSCOPE

MODEL 5516ST

KIKUSUI ELECTRONICS CORPORATION

On Power Supply Source, it is requested to replace the related places in the instruction manual with the following items.

(Please apply the item of √ mark)

☐ Power Supply Voltage: to .....V AC

☐ Line Fuse: to .....A

☐ Power Cable: to 3-core cable (See Fig. 1 for the colors)

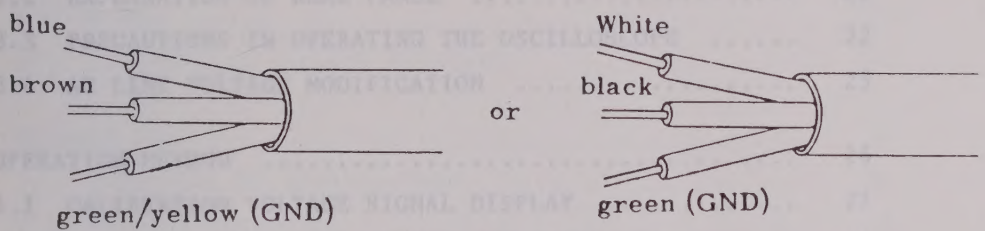

Fig. 1

Please be advised beforehand that the above matter may cause some alteration against explanation or circuit diagram in the instruction manual.

* AC Plug : In case of the Line Voltage 125V AC or more, AC Plug is in principle taken off and delivered, in view of the safety.
(AC Plug on 3-core cable is taken off in irrelevancy with the input voltages.)

Before using the instrument, it is requested to fix a suitable plug for the voltage used.

TABLE OF CONTENTS

		PAGE
1.	GENERAL	1
	1.1 DESCRIPTION	1
2.	SPECIFICATION	2
3.	EXPLANATION OF PANEL SWITCHES AND CONTROLS	12
	3.1 EXPLANATION OF FRONT PANEL	12
	3.2 EXPLANATION OF REAR PANEL	21
	3.3 PRECAUTIONS IN OPERATING THE OSCILLOSCOPE	22
	3.4 AC LINE VOLTAGE MODIFICATION	25
4.	OPERATION METHOD	26
	4.1 CALIBRATION VOLTAGE SIGNAL DISPLAY	27
	4.2 DUAL-CHANNEL OPERATION AND ADD OPERATION	28
	4.3 X-Y OPERATION	30
	4.4 INTENSITY MODULATION	31
	4.5 TRIGGER AND TIME BASE	31
	4.6 TYPE OF TRIGGER SIGNAL SOURCES	32
	4.7 AC AND DC-COUPLING	33
	4.8 FLAT AND HF REJ	34
	4.9 LEVEL KNOB AND PUSH +, PULL -	34
	4.10 COMP AUTO OPERATION	36
	4.11 AUTO OPERATION	36
	4.12 NORM OPERATION	36
	4.13 SINGLE-SWEEP OPERATION	37
	4.14 SWEEP MAGNIFICATION (PULL 5 × MAG)	37
	4.15 APPLICATION METHOD OF VERTICAL INPUT SIGNAL	39
5.	MEASUREMENTS	44
	5.1 VOLTAGE MEASUREMENTS	44
	5.2 MEASUREMENT OF TIME	46
	5.3 PULSE WIDTH MEASUREMENT	46
	5.4 MEASUREMENT OF PULSE RISE TIME AND FALL TIME	47
	5.5 LISSAJOUS MEASUREMENT OF FREQUENCY	48
	5.6 PHASE MEASUREMENT	49

TABLE OF CONTENTS

		PAGE
1.	GENERAL	1
1.1	DESCRIPTION	1
2.	SPECIFICATION	2
3.	EXPLANATION OF PANEL SWITCHES AND CONTROLS	12
3.1	EXPLANATION OF FRONT PANEL	12
3.2	EXPLANATION OF REAR PANEL	21
3.3	PRECAUTIONS IN OPERATING THE OSCILLOSCOPE	22
3.4	AC LINE VOLTAGE MODIFICATION	25
4.	OPERATION METHOD	26
4.1	CALIBRATION VOLTAGE SIGNAL DISPLAY	27
4.2	DUAL-CHANNEL OPERATION AND ADD OPERATION	28
4.3	X-Y OPERATION	30
4.4	INTENSITY MODULATION	31
4.5	TRIGGER AND TIME BASE	31
4.6	TYPE OF TRIGGER SIGNAL SOURCES	32
4.7	AC AND DC-COUPLING	3
4.8	FLAT AND RF PEJ	34
4.9	LEVEL KNOB AND PUSH + PULL -	34
4.10	COMP AUTO OPERATION	36
4.11	AUTO OPERATION	36
4.12	NORM OPERATION	36
4.13	SINGLE-SWEEP OPERATION	37
4.14	SWEEP MAGNIFICATION (PULL 5 x MAG)	37
4.15	APPLICATION METHOD OF VERTICAL INPUT SIGNAL	39
5.	MEASUREMENTS	44
5.1	VOLTAGE MEASUREMENTS	44
5.2	MEASUREMENT OF TIME	46
5.3	PULSE WIDTH MEASUREMENT	46
5.4	MEASUREMENT OF PULSE RISE TIME AND FALL TIME	47
5.5	LINEAIOUS MEASUREMENT OF FREQUENCY	48
5.6	PHASE MEASUREMENT	49

PAGE

6. OPERATION DESCRIPTION 52
6.1 GENERAL 52
6.2 VERTICAL AMPLIFIER 53
6.3 TRIGGER CIRCUIT AND SWEEP GENERATOR CIRCUIT ... 58
6.4 HORIZONTAL AMPLIFIER 63
6.5 Z-AXIS AMPLIFIER 65
6.6 STORAGE CIRCUIT 65
6.7 HIGH VOLTAGE CIRCUIT 68
6.8 POWER SUPPLY 69
6.9 CALIBRATION VOLTAGE GENERATOR 70

7. STORAGE TUBE 71
7.1 STRUCTURE OF STORAGE TUBE 71
7.2 STORAGE PRINCIPLE 73
7.3 STORAGE OPERATION 74
7.4 GENERAL CHARACTERISTICS 77

8. CALIBRATION 83
8.1 GENERAL 83
8.2 CHECK AND CALIBRATION OF DC SUPPLY VOLTAGE 83
8.3 VERTICAL DEFLECTION SENSITIVITY 86
8.4 INPUT CAPACITANCES AND PHASE COMPENSATIONS OF VOLTS/DIV RANGES 87
8.5 SWEEP TIME 88
8.6 CALIBRATION OF PROBE 90
8.7 ADJUSTMENT OF ASTIGMATISM AND GEOMETRY 91
8.8 ADJUSTMENT OF BACK ELECTRODE VOLTAGE 92
8.9 TIMER 94

* BLOCK DIAGRAM 95

* CIRCUIT SCHEMATICS 96

* REPLACEABLE PARTS 112

* PARTS LOCATIONS 140

1. GENERAL

1.1 DESCRIPTION

Kikusui Model 5516ST Storage Oscilloscope is a high-sensitivity dual-channel oscilloscope with a 133-mm (5.24 in.) bi-stable storage tube. It provides a measuring sensitivity of 5 mV, and covers a frequency range of DC - 10 MHz. It features high reliability and ease of operation, and is used for applications from laboratories to production lines.

2. SPECIFICATION

CRT Section

Item	Specification	Remarks
Cathode-ray tube	Bi-stable direct-viewing storage tube, 133 mm (5.24 in.)	Round screen
Fluorescent color	B1	Blue-green
Effective display area	8 × 10 DIV	1 DIV ≒ 9.5 mm (0.37 in.)
Acceleration voltage	Approx. 2000 V	
Blanking	With G1	
Writing speed	40 μsec/DIV (5 μsec/DIV with enhance mode)	
Storage time	Approx. 60 minutes	
Erase time	Approx. 0.5 sec	
Pattern distortion	Within a range between outer frame of 81.2 × 64.9 mm^2 and inner frame of 78.8 × 63.1 mm^2. 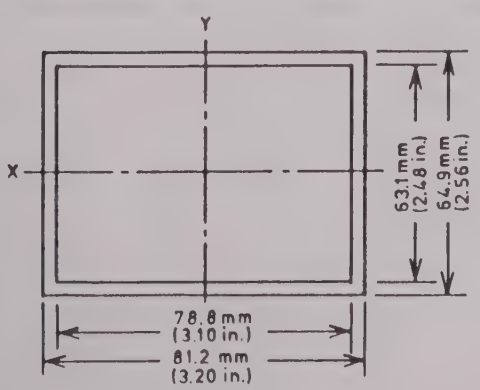	Including trace overlapped on frame line

Item	Specification	Remarks
Trace/graticule alignment	With electrical trace rotation coil	
Graticule illumination	Continuously variable	

Storage Section

Item	Specification		Remarks
Operation mode	NORM	Normal oscilloscope operation	
	STORAGE	Storage oscilloscope operation	
	ENHANCE	Operation with enhanced writing speed	With ENHANCE LEVEL knob on front panel
	AUTO ERASE	Automatically erases the displayed trace after holding it for a preset period of time	The holding period is adjustable for approx. 1 - 30 sec with ERASE INTERVAL knob.
	ERASE	Displayed trace is erased.	
	HOLD	Displayed trace is held.	Trace displayed in the NORM mode is not held.

Vertical Deflection Circuit

Item	Specification	Remarks
Sensitivity	5 mV/DIV - 10 V/DIV, 11 steps	1-2-5 step system
Sensitivity accuracy	Better than ±3% of dial nominal value (with VARIABLE knob set in CAL'D position)	1 kHz, at 4 or 5 DIV
Frequency response	"DC": DC - 10 MHz "AC": 2 Hz - 10 MHz	Within -3 dB, with 50 kHz 8 DIV reference
Continuously variable sensitivity control	Adjustable for 2.5 times or over of dial nominal value	
Rise time	35 nsec	Calculated value
Input impedance	1 MΩ ±2%, 35 pF ±2 pF	Parallel
Input terminals	BNC receptacles	
Maximum allowable input voltage	5 mV/DIV range: 400 V Other ranges: 600 V	DC + AC peak (1 kHz or over for AC)
Input coupling	"AC" and "DC"	
Trace shift caused by offset	0.2 DIV or less at 5 mV/DIV range	When switched from DC to GND, with input terminals open
Trace shift caused by range switching	Within 1 DIV when switched between 2 V/DIV and 5 V/DIV	With AC/DC/GND switch set in GND position

Item	Specification		Remarks
Linearity	Vertical expansion or compression is within ±0.2 DIV when a 4-DIV trace in CRT screen center is moved to the top or bottom position on CRT screen.		With frequency not higher than 100 kHz
Common-mode rejection ratio	100:1 or over, at 50 kHz		With CH1 and CH2 sensitivities set the same
Channel isolation between CH1 and CH2	1000:1 or better (at 100 kHz, with 8 DIV reference)		In dual operation, both CH1 and CH2 set at 5 mV/DIV, a signal corresponding to full CRT screen amplitude is applied to one channel, the other channel terminated with 50 Ω.
Operation mode	CH1	Channel 1 alone	
	CH2	Channel 2 alone	
	DUAL (automatic switching)	ALT: Alternate sweep between CH1 and CH2	
		CHOP: Traces of CH1 and CH2 chopped with a frequency of approx. 100 kHz.	
	ADD	Channels 1 + 2	
PUSH INV	Polarity of CH2 alone is inverted.		

Horizontal Deflection Circuit

Item	Specification	Remarks
Sweep time	0.5 μsec/DIV - 1 sec/DIV	20 ranges, 1-2-5 step system
Sweep time accuracy	Better than ±3%	VARIABLE knob set in CAL'D position
Continuously variable adjustment of sweep time	Variable by 2.5 times or over of dial-indicated value	
Sweep magnification	5 times	
Magnification accuracy	±3% (1 sec/DIV - 0.5 μsec/DIV)	
Shift caused by sweep magnification	Within ±1 DIV at CRT screen center	

Trigger Circuit

Item	Specification	Remarks
Trigger source signal	NORM: CH1 and CH2 signals CH1: CH1 signal alone CH2: CH2 signal alone EXT: External signal	
Coupling	DC, AC, and HF REJECT	
Polarity	+ and -	

Item	Specification	Remarks
Internal trigger sensitivity DC AC HF REJ	 DC - 10 MHz: 0.3 DIV 5 Hz - 10 MHz: 0.3 DIV DC - 50 kHz: 0.3 DIV	
External trigger sensitivity DC AC HF REJ	 DC - 10 MHz: 200 mVp-p 5 Hz - 10 MHz: 200 mVp-p DC - 50 kHz: 200 mVp-p	
COMP AUTO	Completely triggers with a signal of 0.3 DIV or over of amplitude on CRT screen and of a repetition frequency of 50 Hz or over.	Trigger level can be used to select trigger point. Triggering is effected with a 0.3 DIV signal irrespective of setting of the knob.
AUTO	Satisfies the trigger sensitivity specification, for a signal of 50 Hz or over of repetition frequency.	When external trigger signal is disconnected, the sweep runs automatically (free run).
NORM	Satisfies the trigger sensitivity specification	When no trigger signal is applied, the trace is blanked out and remains in the READY state.
SINGLE	One-shot sweep; satisfies all trigger specification items mentioned in the above.	Remains in the READY state until a trigger pulse is applied.

Item	Specification	Remarks
External trigger input impedance	Approx. 100 kΩ, 60 pF or less	Parallel
Input terminals	BNC receptacles	
Maximum allowable input voltage	100 V (DC + AC peak)	AC frequency 1 kHz or less

External Sweep Amplifier (X-Y)

Item	Specification	Remarks
Display system	XY system: CH1 for X CH2 for Y	X: Horizontal axis Y: Vertical axis
Sensitivity	X: 5 mV/DIV - 10 V/DIV Y: 5 mV/DIV - 10 V/DIV	11 steps, for both X and Y
Frequency response	X: DC - 1 MHz Y: DC - 10 MHz	Within -3 dB Within -3 dB
Input impedance	1 MΩ ±2%, 35 pF ±2 pF, for both X and Y	Parallel
Maximum allowable input voltage	5 mV/DIV range: 400 V Other ranges: 600 V (for both X and Y)	DC + AC peak, 1 kHz or less
Input terminals	BNC receptacles (for both X and Y)	X, Y letter indication on panel

Calibration Voltage

Item	Specification	Remarks
Waveform	Square wave	
Polarity	Positive polarity	
Output voltage	200 mVp-p, 2 Vp-p	
Output voltage accuracy	Better than ±3%	
Frequency	1 kHz ±25%	
Duty ratio	45:55 or less	
Rise time	Approx. 150 nsec	
Output terminal	Clip terminals	

Z-axis Amplifier

Item	Specification	Remarks
Intensity modulation	Discernible intensity modulation with 3 Vp-p input signal. Positive input darkens the trace.	
Frequency response	DC - 1 MHz	
Input resistance	Approx. 10 kΩ	
Input terminals	Binding post terminals	

Power Requirements

Item	Specification	Remarks
AC line voltage	100 V, 110 V, 117 V, 200 V, 220 V, 230 V, 240 V; ±10%	Can be changed with transformer taps, normally set at 100 V as shipped from the factory.
Frequency	50 - 60 Hz	
Power consumption	Approx. 68 VA	

Dimensions and Weight

Item	Specification	Remarks
External dimensions	315 W × 225 H × 465 D mm (12.40W × 8.86H × 18.31D in.)	Maximum dimensions
	280 W × 184 H × 400 D mm (11.02W × 7.24H × 15.75D in.)	Chassis
Weight	Approx. 11 kg (24.2 lb.)	Net

Accessories

Item	Q'ty
Probe 960 BNC (1:1, 10:1)	2
Type 942A Adaptor	1
Shorting bar (short)	1
Hex bar wrench (3 mm (0.12 in.))	1
Fuse (1 A, slow blow)	1
Instruction Manual	1

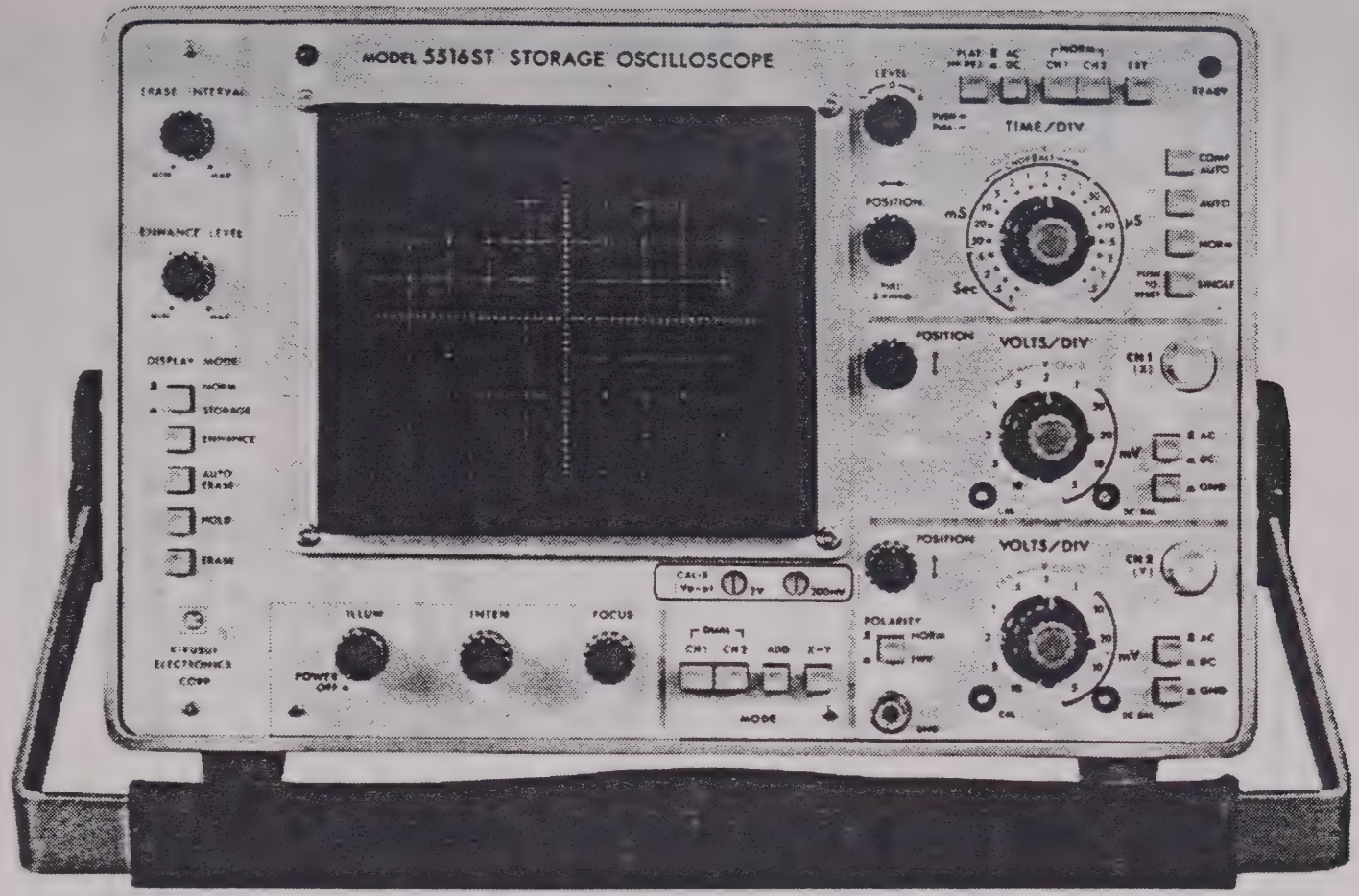
MODEL 5516ST STORAGE OSCILLOSCOPE
ERASE INTERVAL
ENHANCE LEVEL
DISPLAY MODE
NORM
STORAGE
ENHANCE
AUTO ERASE
HOLD
ERASE
KIKUSUI ELECTRONICS CORP
ILLUM
INTEN
FOCUS
POWER OFF
CAL-S
MODE
LEVEL
POSITION
TIME/DIV
mS
µS
Sec
COMP AUTO
AUTO
NORM
SINGLE
VOLTS/DIV
mV
POLARITY
NORM
INV
CH1
CH2
ADD
X-Y
READY

Figure 3-1

3. EXPLANATION OF PANEL SWITCHES AND CONTROLS

3.1 EXPLANATION OF FRONT PANEL

This section covers the switches, controls, and terminals of the instrument panels. Of the double-control knobs, the black knobs correspond to black letters and red knobs correspond to red letters.

POWER OFF: In common with the ILLUMINATION knob. The extreme counterclockwise position is POWER OFF.

ILLUM: Graticule illumination control. Becomes brighter as this knob is turned clockwise.

INTEN: Trace intensity control. Trace becomes brighter as this knob is turned clockeise.

FOCUS: Focusing control of spot or trace on CRT screen. Should be so adjusted (in combination with internal ASTIG control as required) that spot or trace becomes sharpest.

CALIB (Vp-p): Square-wave generator for sensitivity calibration or probe phase characteristics adjustment. Output voltages are 2 Vp-p and 200mV, and frequency is approximately 1 kHz. The output signal is delivered through the clip terminal on the front panel.

Vertical Deflection Units:

The functions of controls and terminals of CH1 and CH2 are idential, and the same explanation is applicable to both channels.

CH1, CH2: (X) (Y) Vertical input terminals (or X-Y input terminals). The input signals are connected to these terminals (also when the probe(s) is used).

AC, DC

Input coupling mode selector pushbutton switch. Depressed state is for DC and popped up state is for AC. When in AC coupling, the DC component (if any) of the input signal is blocked and the AC component alone is displayed. When in DC coupling, the input signal including the DC component is displayed.

GND:

As you depress this GND pushbutton switch, the input circuit of vertical amplifier is disconnected from the BNC input terminal and is grounded. This state is convenient for checking the zero potential position on CRT screen.

VOLTS/DIV

Black knob is the vertical deflection sensitivity selector switch for 5 mV/DIV - 10 V/DIV in 11 ranges. It indicates the vertical sensitivity per 1 DIV on the CRT screen, with the VARIABLE knob set in the CAL'D position.

Red knob is the continuously-variable sensitivity control, of which extreme clockwise position is the CAL'D position. As this knob is turned to the extreme counterclockwise position, the sensitivity is reduced by a factor of 1/2.5 approximately.

POSITION

Vertical positioning of the trace. The trace moves upward as this knob is turned clockwise.

DC BAL:

Potentiometer for adjusting the shift of trace when the VOLTS/DIV switch is turned. (For this oscilloscope, the switch is turned between 2 V/DIV and 5 V/DIV for specification.)

CAL: Vertical sensitivity adjustment. Common for all ranges.

GND: Ground terminal electrically connected to the panel, chassis, and main unit. (Common for CH1 and CH2)

POLARITY: Pushbutton switch for inverting the phase of CH2 input signal. The depressed state is for phase inversion.

Of the above items except the GND terminal and POLARITY switch, the functions are identical for both CH1 and CH2.

MODE: Four pushbuttons for selecting operation modes of CH1 and CH2 vertical amplifiers as mentioned in the following.

CH1: CH1 alone operates, making the oscilloscope a single channel instrument.

CH2: CH2 alone operates, making the oscilloscope a single channel instrument.

┌DUAL┐
CH1 CH2 : When both CH1 and CH2 buttons are depressed, CH1 and CH2 vertical amplifiers are automatically switched in the CHOP or ALT mode and the oscilloscope operates as a dual channel instrument. The CHOP mode is for 0.5 sec/DIV to 1 msec/DIV and the ALT mode is for 0.5 msec/DIV to 0.2 μsec/DIV.

ADD: CH1 and CH2 opetate at the same time and the sum (CH1 + CH2) or difference (CH1 - CH2) of the two channels is displayed on the screen. For (CH1 - CH2), depress the POLARITY button of CH2.

X-Y: Displays an X-Y pattern with X-axis for CH1 and Y-axis for CH2. Frequency response of X-axis is DC - 1 MHz (-3 dB).

Horizontal Deflection Section

POSITION: For horizontal positioning of spot or trace. The spot moves leftward as this knob is turned clockwise, and vice versa.

PULL 5 x MAG: This switch is in common with the POSITION knob. As you pull out this knob, the sweep amplitude is magnified by 5 times with the screen center as the center of magnification, except the case of XY-scope in which case the magnification function remains idle.

TIME/DIV: Black knob selects a sweep range among 20 ranges covering from 0.5 sec/DIV to 0.2 usec/DIV. The dial values are sweep speeds per 1 DIV, with the VARIABLE knob set in the CAL'D position.

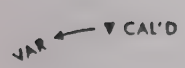

Red knob is for continuously-variable adjustment of sweep speed. Its extreme clockwise position is the CAL'D position. When at the extreme counterclockwise position, the sweep speed is reduced by a factor of 1/2.5 approximately.

For adjusting the trigger level of the trigger signal waveform. The trigger level becomes higher in the positive direction as this knob is turned clockwise, and vice versa.

PUSH +
PULL −

Pushbutton switch for selecting a triggering slope on the trigger signal waveform. The "PUSH +" state is for triggering with a positive-going slope and the "PULL −" state is for triggering with a negative-going slope.

COMP AUTO:

This button is for operating the COMPLETE AUTO TRIGGER circuit. When this button is depressed, the trigger level is automatically adjusted and triggering is effected as long as the triggering input signal is 0.3 DIV or over as displayed on the CRT screen or the input signal applied to the EXTERNAL TRIGGER INPUT terminal (BNC receptacle on the rear panel) is 200 mV or over. Even when in this mode, the trigger level can be set at any point within the peak-to-peak range of the input signal so that the required section of the signal waveform is displayed on the CRT screen.

AUTO:

When this button is depressed, the horizontal sweep runs in the FREE RUN mode. When no input signal is applied, a sweep trace is displayed on the screen. It can be triggered with an input signal of 50 Hz or over and 3 mm or over of amplitude on the screen. (The sweep is synchronized if the trigger level is within the measured input signal range, or the sweep runs in the free mode if the level is not within the input signal range.)

NORM: When no measured signal is applied, the time base is in a stand-by state and no sweep runs. When a measured input signal is applied, the sweep runs being synchronized with the signal, provided that the trigger level is within the peak-to-peak range of the signal.

SINGLE: Pushbutton switch for one-shot sweep operation. As you press this button, all of the other three buttons (COMP AUTO, AUTO, and NORM buttons) are reset to the popped-up state and this SINGLE button itself also is reset to the popped-up state.

PUSH TO RESET: The SINGLE sweep button is used in common for this function. By pressing this button, the single-sweep operation can be reset after it has completed its one cycle of operation.

READY: This LED lamp indicates that the time base is in the READY state for the SINGLE sweep operation.

FLAT ⎍
HF REJ ⎓ : Pushbutton switch for selecting a coupling state of trigger input signal. When in the FLAT state, the trigger signal of CH1, CH2, NORM or EXT is directly applied to the trigger circuit. When in the HF REJ (high frequency reject) state, the trigger signal is applied through low pass filter of approximately 50 kHz so that noise or other high-frequency components higher than this frequency are cut off.

AC ⊓
:
DC ⊓

Pushbutton switch for selecting a coupling state of trigger input circuit. When in the AC state, the trigger input circuit is AC-coupled and the DC component, if any, of the trigger signal is cut off and the AC component alone is applied to the trigger circuit. When in the DC state, the trigger input circuit is DC-coupled and the input signal including the DC component is applied to the trigger circuit.

NORM
CH1 CH2 EXT
:

Pushbuttons for selecting a signal source among four types as follows:

CH1:

The signal applied to vertical CH1 is used as the trigger signal, irrespective of vertical MODE switch setting (whether it is set for CH2, DUAL, or ADD).

CH2:

The signal applied to vertical CH2 is used as the trigger signal, irrespective of vertical mode switch setting (whether it is set for CH1, DUAL, or ADD).

NORM
CH1 CH2
:

When CH1 and CH2 are depressed at the same time, triggering is in the NORM mode and the displayed signal waveforms are triggered with respective signals. (Alternate trigger)

EXT:

The signal applied to the EXT TRIGGER IN terminal is used as the trigger signal.

Storage Section

NORM ⎍ : STORAGE ⎍

When in the NORM state, the instrument operates as a regular oscilloscope. When in the STORAGE state (depressed state), it operates as a storage oscilloscope. When switched from the NORM mode to the STORAGE mode, the image existing on the CRT screen is erased.

ENHANCE:

When this button is depressed, the writing speed becomes faster. The level of this effect is adjustable with the ENHANCE LEVEL knob.

AUTO ERASE:

If this button is kept depressed, the displayed pattern is automatically erased when the desired period has elapsed. The period is adjustable with the ERASE INTERVAL knob. The instrument repeats the STORAGE and ERASE operations.

ERASE:

As you push this button, the image displayed on the CRT screen is erased. This ERASE function has the highest priority over all other functions except the HOLD function.

HOLD:

At the moment this button is pressed, the pattern existing on the CRT screen is held. This function has the highest priority, and the pattern is kept in the held state until this button is pressed again or the operation is changed to the NORM mode or the POWER is turned off. Thus, this button is used when the pattern is required to be held for any required period of time up to an hour. Note that the CRT life may be badly reduced if a stored pattern is displayed for a period of time exceeding one hour.

ERASE INTERVAL:

Adjusts the automatic erase period. This control is effective only when the AUTO ERASE button is kept depressed. The adjusting range is approx. 1 sec (minimum) to approx. 30 sec (maximum).

ENHANCE LEVEL:

Adjusts the level of the enhance function. This control is effective only when the ENHANCE button is kept depressed. The enhance level is increased as this knob is turned clockwise. When this knob is turned to the extreme clockwise position, overall CRT screen becomes bright. This knob should be turned to a position of compromise between writing speed and quality of display. The writing speed without ENHANCE is approximately 40 µsec/DIV, that with ENHANCE can be increased to approximately 5 µsec/DIV with fairly good display.

3.2 EXPLANATION OF REAR PANEL

The items on the rear panel are the EXT TRIG IN terminal (BNC receptacle), TRACE ROTATION control (variable resistor), Z-AXIS IN terminals (binding posts), fuse holder, and power cord.

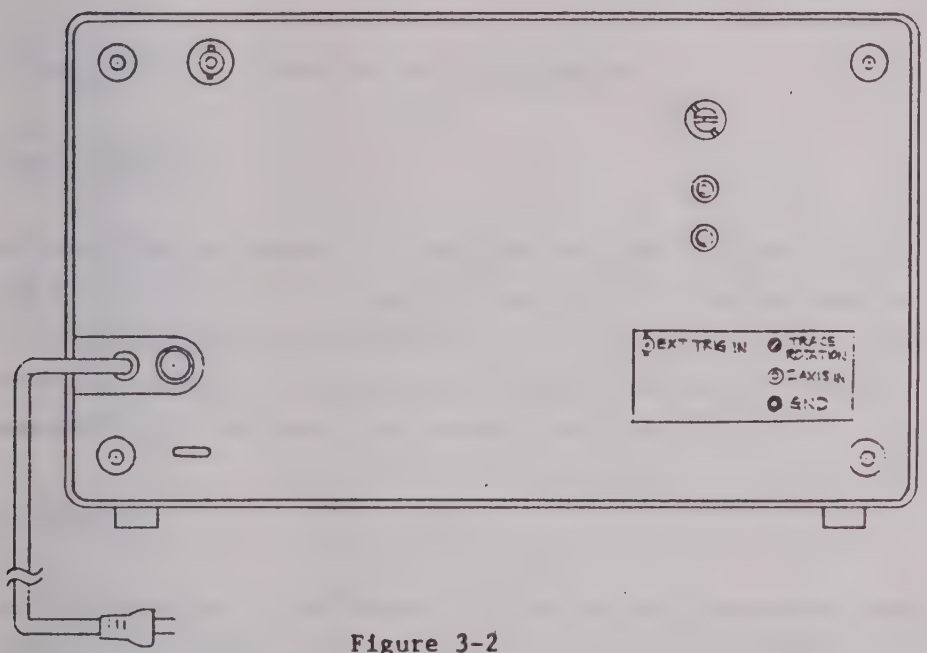

Figure 3-2

EXT TRIG IN: BNC receptacle for external trigger input signal.

Z-AXIS IN
GND : Binding post terminals for external intensity-modulation input signal. Red terminal is for hot and black terminal for ground. When not in use, these terminals should be connected together with the shorting bar (supplied).

TRACE ROTATION: Variable resistor adjustment of trace to align with the horizontal graticule.

FUSE: 1-Ampere slow-blow fuse in AC power input circuit. The fuse can be removed by turning the fuse holder cap counterclockwise.

AC LINE: AC power cord to be connected to an AC line outlet of the specified voltage.

3.3 PRECAUTIONS IN OPERATING THE OSCILLOSCOPE

AC line voltage:

The oscilloscope normally is shipped being set for the nominal 100 V AC line power, as a general rule. With this setting the oscilloscope normally operates on an AC line power of 100 V ±10%. Note that the oscilloscope may not operate normally or may be damaged if the voltage is not within this range.

Environments:

Ambient temperature and humidity: The ambient temperature specification of this oscilloscope is 0°C to 40°C (32°F to 104°F). Note that mal-functioning and life shortening may result if the oscilloscope is used or stored in high-temperature high-humidity atmosphere for a long period.

Electromagnetic or electrostatic field: The measuring accuracy may be degraded if the oscilloscope is placed in a strong electromagnetic or electrostatic field.

Protection of CRT screen:

Note that the CRT screen may be damaged if the trace intensity is abnormally high or a stationary spot is left for a long period.

Maximum allowable voltages of input terminals:

The maximum allowable input voltages of the input terminals and probe are as shown in the following table. Note that the input circuit may be damaged if an input voltage higher than the specified value is applied.

CH1 and CH2 terminals	
when VOLTS/DIV is in 5 mV range position	400 V (DC + AC peak)
when VOLTS/DIV is in other range position	600 V (DC + AC peak)
Probe (960 BNC)	600 V (DC + AC peak)
EXT TRIG IN terminal	100 V (DC + AC peak)
Z-AXIS IN terminal	100 V (DC + AC peak)

Repetition frequency: Not higher than 1 kHz

Precautions in storage operation:

(1) If you turn on the power switch of the oscilloscope while set in the STORAGE state, the CRT may be stored over the entire screen. In such a case, push the ERASE button once or twice. If you leave the images stored on the screen, the life of the CRT is adversely affected. When you have switched the display mode from the NORM to the STORAGE, the images are erased as the ERASE function is automatically effected. However, if any image is left over, press the ERASE button once or twice.

(2) The maximum storage time is approximately 60 minutes. Note that the storage function or writing speed is degraded if stored images are left over for a long period exceeding about an hour. To make the best use of the service life of the storage tube, store the images for the required minimum periods of time. Pay attention also to the following states which also adversely affect the life expectancy of the CRT tube.

2-1. A high-intensity stationary spot is left displayed on the screen.

2-2. A high-intensity horizontal sweep trace is left displayed on the screen.

2-3. A sweep trace of 1 msec/DIV or lower speed is left displayed on the screen.

(3) Be careful not to forget to erase the displayed image after holding the displayed image by depressing the HOLD button. When in the hold state, the image is dead stationary and, if you forget to erase the image, the CRT screen is very adversely affected.

3.4 AC LINE VOLTAGE MODIFICATION

The oscilloscope can be modified for other AC line voltages than 100 V, as shown in the following table, by changing transformer taps. The rating of the AC power cord which accompanies the oscilloscope is 125 V, 7A. When modifying the instrument for a voltage higher than 125 V, replace the cord with that of a higher voltage rating. The fuse rating should be as indicated in the table.

Voltage	Fuse (A)	Note
90 - 110 100 - 120 105 - 129	1	Use a slow-blow fuse.
180 - 220 200 - 240 210 - 258	0.5	

4. OPERATION METHOD

Before turning ON the oscilloscope power, set the switches and controls on the front panel as follows:

INTEN, POWER OFF		Extreme counterclockwise
FOCUS		Mid-position
NORM, STORAGE		NORM
MODE		Press CH1 button
TRIGGER	LEVEL	Mid-position
	FLAT - HF REJ	FLAT
	AC - DC	AC
	CH1 - CH2 - NORM - EXT	CH1
	COMP AUTO - AUTO - NORM	AUTO
	- SINGLE	
TIME/DIV		0.2 mS
POSITION (horizontal)		Mid-position
CH1	POSITION (vertical)	Mid-position
	VOLTS/DIV	0.2 V (red knob in CAL'D position)
	AC - DC	DC
	GND	Press GND button

Connect the power cord to a power line outlet (100 V AC) and turn clockwise the INTEN knob from its POWER OFF position. The oscilloscope power is turned ON, and the LED at upper left of the panel lights. Wait in this state about 10 seconds and, then turn the INTEN knob clockwise so that a trace of an appropriate brightness is displayed on the screen.

FOCUS adjustment:

Move the trace to the center of the screen by adjusting the CH1 and horizontal POSITION knobs. So adjust the FOCUS knob that the displayed trace becomes focused.

4.1 CALIBRATION VOLTAGE SIGNAL DISPLAY

Display on the screen the CALIB signal of the oscilloscope by setting to CH1 input terminal the BNC terminal adaptor (supplied) and connecting the square wave calibration voltage signal using as short wires as possible. (Set the CALIB output signal at 200 mV.) Set the switches and controls on the front panel as follows.

AC - DC (CH1) pushbutton switch:	DC
GND (CH1) pushbutton switch:	Not depressed
VOLTS/DIV (CH1) knob:	50 mV
VARIABLE (CH1) knob:	CAL'D
TIME/DIV knob:	0.2 mS
VARIABLE knob:	CAL'D
Other switches and controls:	As set when the power is turned ON

When the switches and controls are set as above, a square wave with an amplitude of 4 DIV will be displayed on the screen.

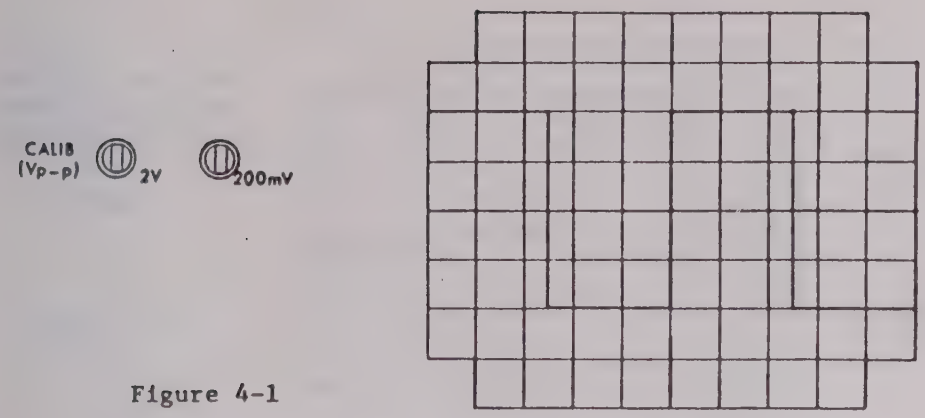

Figure 4-1

As you turn the VOLTS/DIV knob counterclockwise range by range, the vertical amplitude will be reduced in response. As you turn counterclockwise the VARIABLE knob, the amplitude will be reduced continuously. With these operations, you can know the effects of the VOLTS/DIV and VARIABLE knobs on the displayed waveform amplitude.

4.2 DUAL-CHANNEL OPERATION AND ADD OPERATION

Dual-channel operation:

Set the MODE pushbutton switch in the DUAL mode. (Press the CH1 and CH2 pushbutton switches at the same time.) Apply the calibration signal (200 mV) also to CH2. (In the above operation, the signal was applied to CH1 only and no signal was applied to CH2.) In this case, leave the TRIGGER selector switch in the CH1 position so that the signal of CH2 also is triggered by the signal of CH1. If the signal applied to CH2 is in a synchronizing relationship with respect to that applied to CH1, the displayed waveforms of both CH1 and CH2 are stationary.

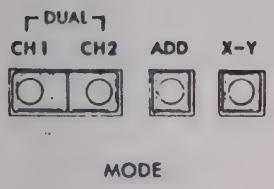

Figure 4-2

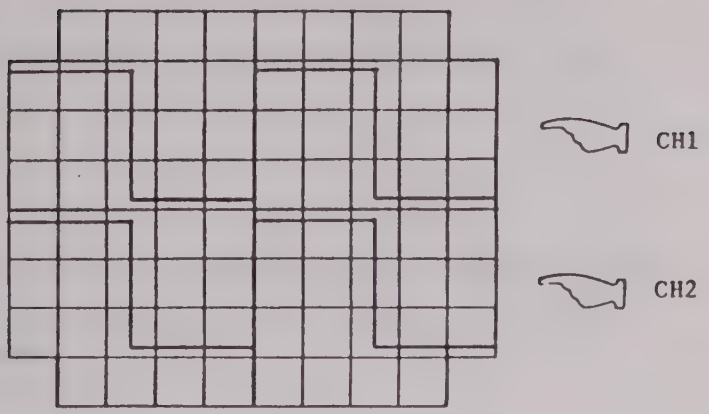

For dual-channel operation, this oscilloscope has no CHOP or ALT switch but has a DUAL pushbutton switch only. Switching between CHOP and ALT modes is done by the TIME/DIV knob -- CHOP mode for 1 S - 1 mS/DIV ranges and ALT mode for 0.5 mS - 0.5 µS/DIV ranges.

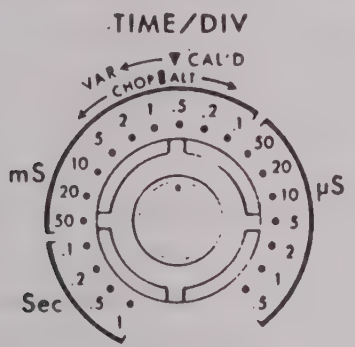

Figure 4-3

ADD operation:

Set the MODE pushbutton in the ADD mode. The displayed waveform is the sum (or difference) of the two signals applied to CH1 and CH2.

CH1 ± CH2 = Add waveform

Next, set the CH2 polarity pushbutton switch in the INV mode. In this case the difference of CH1 - CH2 is displayed on the screen. (INV state: Polarity of CH2 signal inverted by 180°)

4.3 X-Y OPERATION

Set the MODE pushbutton switch in the X-Y state. With this single action, the oscilloscope operates as an X-Y scope with CH1 as X-axis and CH2 as Y-axis.

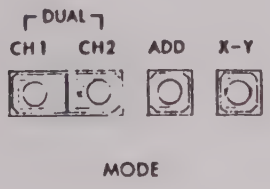

Figure 4-4

While the electrical performance of the Y-axis remains the same with that of CH2 operated in the single-channel CH2 mode, frequency response of the X-axis becomes DC - 1 MHz, -3 dB. (The VARIABLE knob and CH1 POSITION knob remain idle.)

The X-axis position is adjustable with the horizontal POSITION knob. When in the X-Y mode, the operation is more pronounced than when in the sweep mode. The other electrical performances remain the same as when CH1 is operated in the single-channel CH1 mode.

Next, apply the CALIB signal to both X and Y axes and adjust the VOLTS/DIV switches so that two spots are displayed on a diagonal line on the screen. A Lissajous figure with frequency ratio 1:1 and phase angle $\simeq$ 0 will be displayed.

When in the X-Y operation, the 5 × MAG switch (which is linked to the horizontal POSITION knob) remains idle.

4.4 INTENSITY MODULATION

The INTEN MOD signal input terminals are located at the rear of the oscilloscope. For intensity modulation, remove the short bar from the terminals and connect an external intensity modulation signal between red terminal and black (GND) terminal. When intensity modulation is not used, keep the short bar connected between the two terminals.

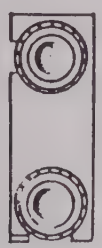

Figure 4-5

4.5 TIRGGER AND TIME BASE

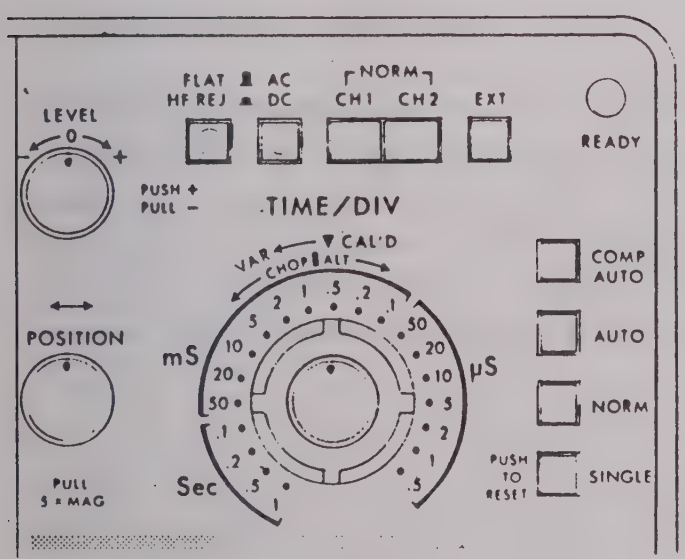

Figure 4-6

The CALIB voltage signal is a square wave of approximately 1 kHz. When the TIME/DIV knob is set in the 0.2 mS/DIV position, one cycle of the square wave is displayed with a horizontal magnitude of approximately 5 DIV.

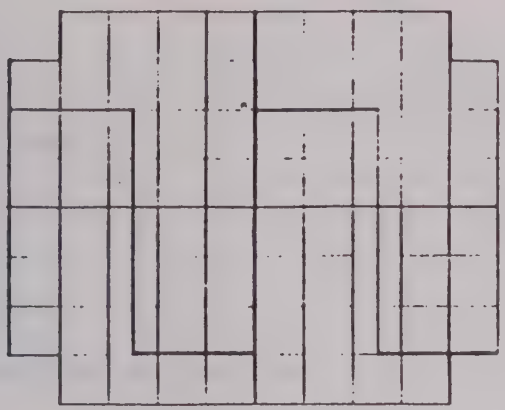

Figure 4-7

As you turn the TIME/DIV knob clockwise, the sweep time becomes faster. The VARIABLE knob is for continuously-variable adjustment of sweep time.

4.6 TYPE OF TRIGGER SIGNAL SOURCES

To display a stationary pattern on the screen, a signal which is synchronized to the input signal must be applied to the trigger circuit for triggering the sweep circuit. The four types of trigger signal sources are the NORM (signals displayed on the screen), CH1 (signal of CH1), CH2 (signal of CH2), and EXT (external signal applied through the EXT TRIG IN terminal).

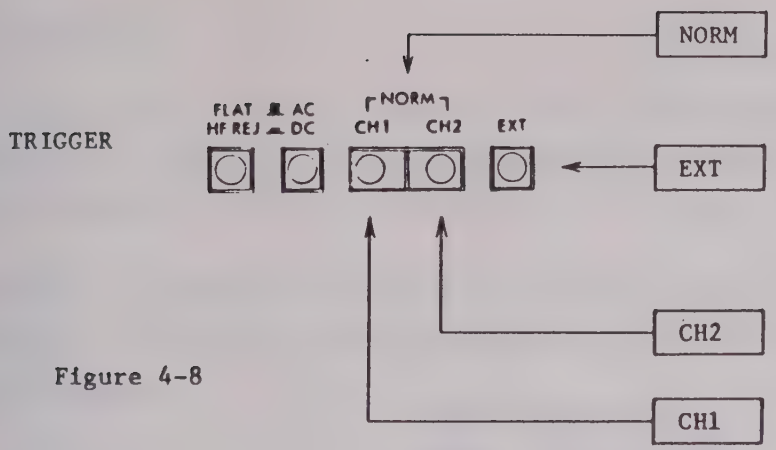

Figure 4-8

4.6.1 INTERNAL TRIGGER (NORM CH1, CH2)

When in the internal trigger mode, the input signal is picked up at a point in the vertical amplifier and the signal is amplified to a sufficient level for triggering and applied to the trigger circuit.

When in the NORM mode, the signals (CH1 and CH2) displayed on the screen are used as trigger signals. When in the CH1 mode, the input signal of CH1 alone is used as trigger signal, when in the CH2 mode, the input signal of CH2 alone is used as trigger signal.

4.7 AC AND DC-COUPLING

This oscilloscope is capable of DC-coupling of trigger input. The DC-coupling is especially advantageous when the input trigger signal is 5 Hz - DC and when used in the single sweep mode. The AC-coupling is used for a trigger input signal of 5 Hz - 10 MHz or when the trigger signal has a DC component.

4.8 FLAT AND HF REJ

When in the HF REJ, a low pass filter of 50 kHz is connected before the trigger input circuit in order to eliminate the noize and high frequency components which are superimposed on the trigger signal.

Triggering may be improved by setting in the HF REJ state when the oscilloscope is in the dual-channel mode and the TIME/DIV knob is in the CHOP range.

When 50 kHz or higher frequency is superimposed

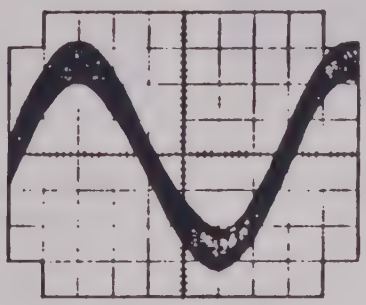

Figure 4-9

When in the FLAT mode, stable triggering can be done for a range of DC - 10 MHz.

4.9 LEVEL KNOB AND PUSH +, PULL -

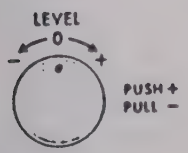

Figure 4-10

Apply a sinusoidal or triangular signal of approximately 1 kHz to the CH1 input terminal. (So adjust the input signal level or the input attenuator of the oscilloscope that the signal is displayed with an amplitude of 6 DIV or over.) Set the switches and controls as follow:

FLAT HF REJ:	FLAT
AC - DC:	AC
CH1, CH2, NORM, EXT:	CH1
TIME/DIV:	0.2 mS/DIV
COMP AUTO, AUTO, NORM, SINGLE:	AUTO

Turning the LEVEL knob from the counterclockwise position to the clockwise position, observe that the displayed image changes from the free-run state to a synchronized state, the starting point of the waveform moves from upward to downward and again the displayed waveform free-runs.

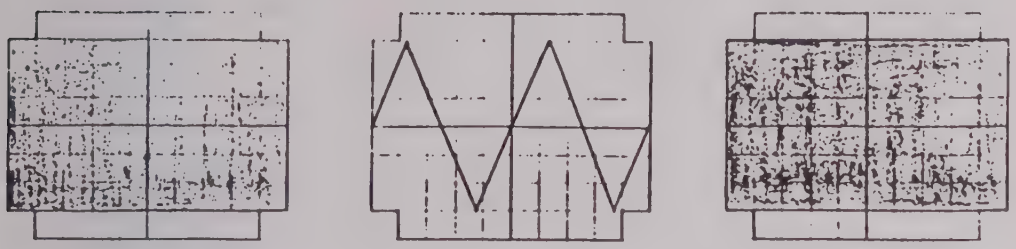

(a) Free-run (b) Synchronized waveform (c) Free-run

Figure 4-11

As you turn the LEVEL knob clockwise from the position where the displayed waveform has become stationary, the waveform will move from right to left on the screen and the starting point of the waveform also will be moved from a lower position to an upper position. (trigger level shift)

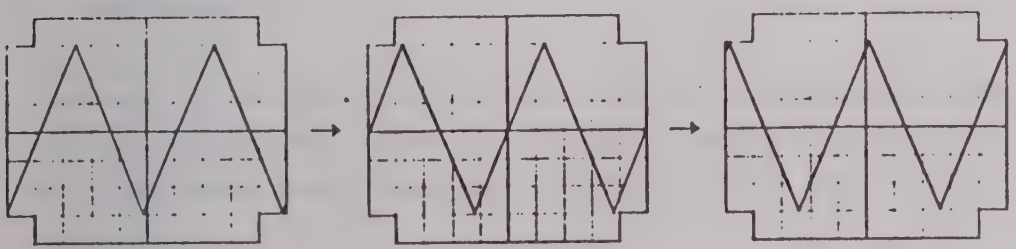

Figure 4-12

Next, pull out the LEVEL knob. The slope of the starting point of the waveform will be inverted, indicating that triggering is effected with the negative polarity.

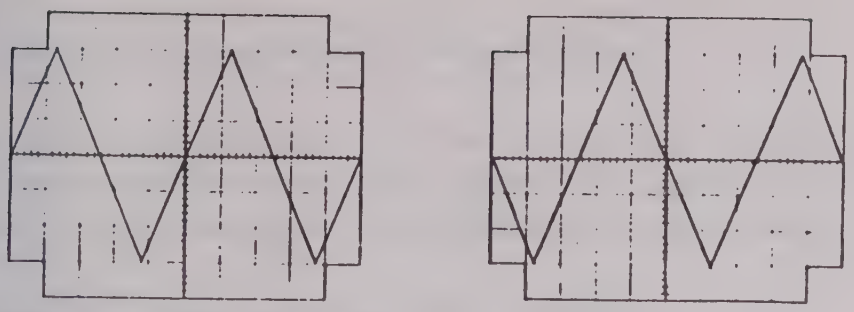

PUSH +　　PULL -

Figure 4-13

4.10 COMP AUTO OPERATION

Change the mode from the AUTO pushbutton switch to the COMP AUTO pushbutton switch. At the same time, so adjust the input attenuator of the oscilloscope that the displayed signal waveform amplitude becomes approximately 0.3 DIV. The displayed waveform will remain stationary and its amplitude will be reduced. (This can be observed more clearly by setting the TIME/DIV knob in the 1 mS/DIV position.) A synchronized stationary waveform is displayed even when the amplitude is increased to 8 DIV or over.

4.11 AUTO OPERATION

When set in the AUTO mode, the sweep circuit operates without requiring any trigger input signal and a bright trace is displayed even at a fast sweep range, enabling to check easily the zero level.

4.12 NORM OPERATION

When set in the NORM mode, the sweep circuit is in the standby state and no trace is displayed on the screen if no input signal is applied to the oscilloscope, if the external signal applied to the EXT TRIG IN terminal is less than 200 mVp-p, or if the setting of the LEVEL knob is exceeding the triggering point.

4.13 SINGLE-SWEEP OPERATION

For the single-sweep operation, proceed as follows:

(a) Apply a repetitive signal to CH1 or CH2, set the trigger circuit in the NORM mode, and so adjust the trigger LEVEL knob that the signal waveform is displayed on the screen.

(b) Change the trigger mode from NORM to SINGLE.

(c) Disconnect the input signal.

(d) Press the SINGLE switch again. (PUSH TO RESET operation)

(e) As you release the switch, it is reset to the original state and the LED lamp at upper right on the front panel lights to indicate that the sweep circuit is in the standby state.

(f) Apply the signal to be observed. The sweep circuit will be triggered with this signal and the sweep circuit will operate only once and the LED lamp will go off. The sweep circuit does not operate again unless the SINGLE pushbutton switch is pressed again.

4.14 SWEEP MAGNIFICATION (PULL 5 × MAG)

When you want an enlarged waveform of a certain part of the input signal, you may use a fast sweep time. However, if you use a fast sweep when the part to be observed is away from the start of the sweep, the required part may run off the screen. In such a case, this sweep magnification feature is used.

As you pull out the horizontal POSITION knob to the 5 × MAG state, the displayed waveform is magnified horizontally by 5 times with the center of screen as center of magnification.

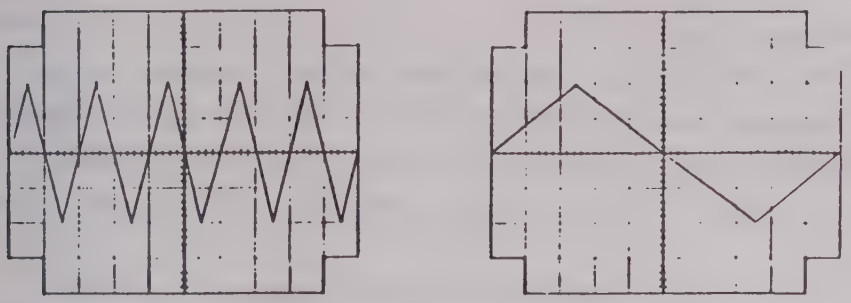

(a) Before magnification (b) After magnification

Figure 4-14

The sweep time when in the magnification can be calculated as follows:

TIME/DIV (DIAL VALUE) ÷ 5 = SWEEP TIME/DIV

Thus the maximum sweep speed of this oscilloscope become 100 nS/DIV as 0.5 μS/DIV is magnified by five times with sweep magnification.

The trace intensity is reduced when operated in the sweep magnification mode. Therefore, this mode should not be used except the following cases:

(1) When a part which is away from the start point of the displayed waveform is required to be magnified.

(2) When a sweep speed faster than 0.5 μS/DIV is required.

4.15 APPLICATION METHOD OF VERTICAL INPUT SIGNAL

4.15.1 USING A COAXIAL CABLE

When the signal source impedance is 50 or 75 ohms, a coaxial cable of matched impedance may be used so that a signal which has high frequency components can be transmitted with less attenuation. For impedance matching, terminate the cable at the oscilloscope side using a purely-resistive resistor of 50 or 75 ohms.

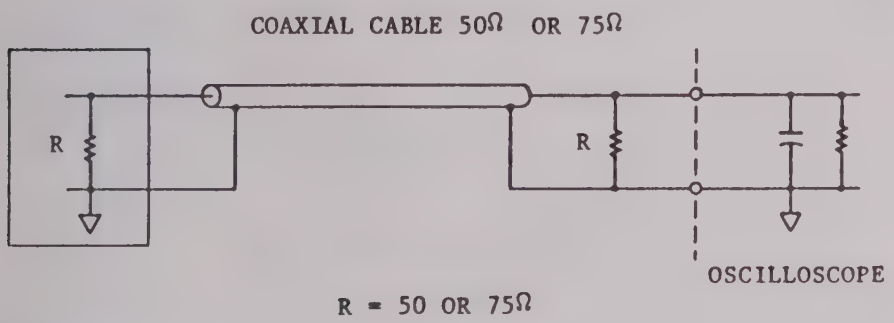

Figure 4-15

4.15.2 USING THE PROBE

The signal to be observed can be fed most effectively by using the 10:1 attenuation probe which is supplied as an accessory item. The cable from the probe to the oscilloscope and the probe itself are shielded to prevent external noise.

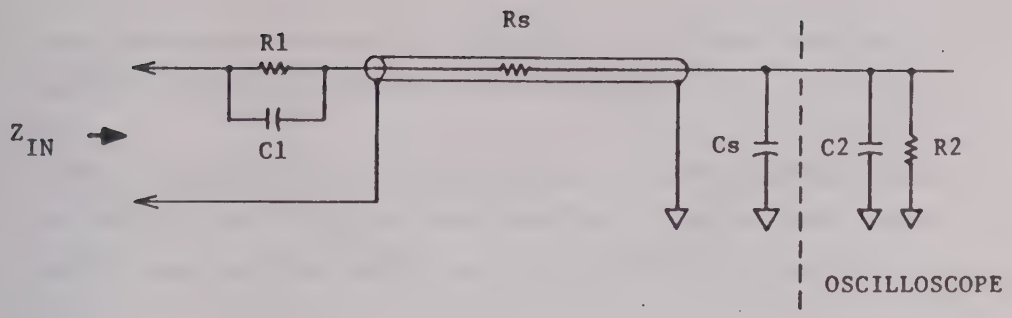

$$Z_{IN} = \frac{R1 + R2}{\omega C\ (R1 + R2) + 1}$$

$$C = \frac{C1 \times (C2 + Cs)}{C1 + C2 + Cs}$$

Rs: Series resistance of cable

Cs: Stray capacitance + cable capacitance

Figure 4-16

Attenuation resistor R1 and its parallel capacitor C1 make up a wide band attenuator. The use of this probe is especially advantageous when the measured signal source impedance is high or when the signal has high frequency components. The use of the probe reduces the loading effect on the measured signal source. The attenuation ratio is 10:1 as calculated below:

$$\frac{R2}{R1 + R2} = \frac{1\ M\Omega}{9\ M\Omega + 1\ M\Omega} = \frac{1}{10}$$

The purpose of attenuation is not to lower the signal voltage level but is to reduce the loading effect on the measured signal source.

4.15.3 NOTES WHEN USING THE PROBE

(1) Make sure that the measured signal is not higher than the specified maximum allowable input voltage.

(2) When measuring a wide frequency signal at a high sensitivity, be sure to use the groud wire supplied. Also use the ground wires supplied when measuring in the dual-channel mode.

(3) Make sure that the phase of the probe is accurately adjusted. Be sure to use the probe supplied as an accessory of the oscilloscope.

(4) Be careful not to apply abnormally large mechanical shocks or vibration to the probe. Do not pull or sharply bend the probe cable.

(5) The probe main unit and its tip are not highly heat resistant. Do not apply a soldering iron close to the probe.

4.15.4 OPERATION IN AC-COUPLING

To observe an AC signal superimposed on a DC component the AC-coupling is used in general. When the frequency is lower than 1 kHz, however, pay attention to that the phase may lead or lag and the amplitude may be decreased. When a square wave of 1 kHz is applied, for example, sag may be caused and the waveform may be distorted as illustrated.

Figure 4-17

The waveform of ① shows typical sag which is caused when the low frequency component is in a leading phase and the amplitude is attenuated. The waveform of ② shows typical sag which is caused when the low frequency component is in a lag phase and the amplitude is attenuated. The use of DC-coupling is ideal.

The input impedance of the oscilloscope is 1 MΩ, with the 0.1 μF AC-coupling capacitor connected in series. When a low frequency square wave or stepwise signal is applied, sag as shown in waveform ① is caused.

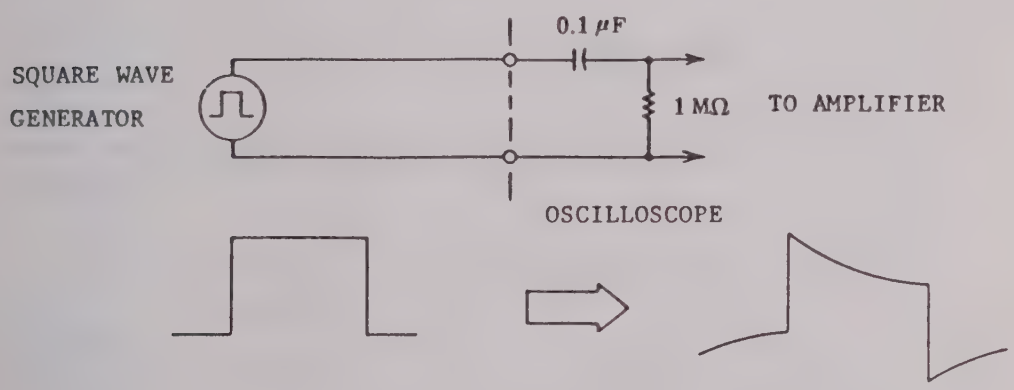

Figure 4-18

The percent of sag can be calculated as follows:

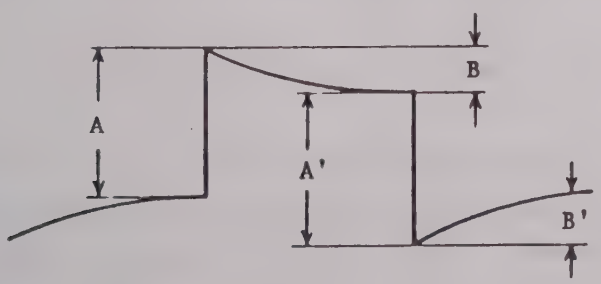

Figure 4-19

A: Basic amplitude

B: Sag

$$\text{Sag } (\%) = \frac{B}{A} \text{ (or } \frac{B'}{A'}) \times 100$$

Percent of sag of this oscilloscope is shown in the following:

Repetition frequency	Sag (%)
10 Hz	26
50 Hz	4
100 Hz	2
500 Hz	0.6

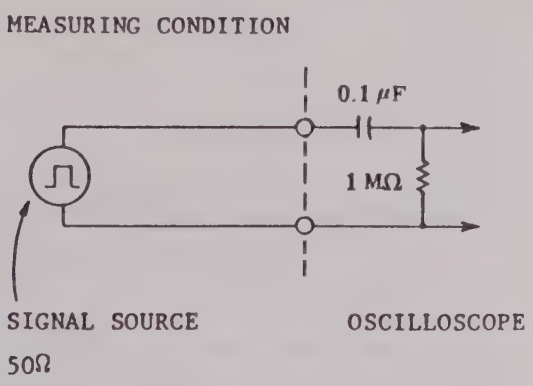

Figure 4-20

Percent of sag when the 10:1 probe is used is shown in the following:

Repetition frequency	Sag (%)
10 Hz	2.6
50 Hz	0.4
100 Hz	0.2
500 Hz	0.06

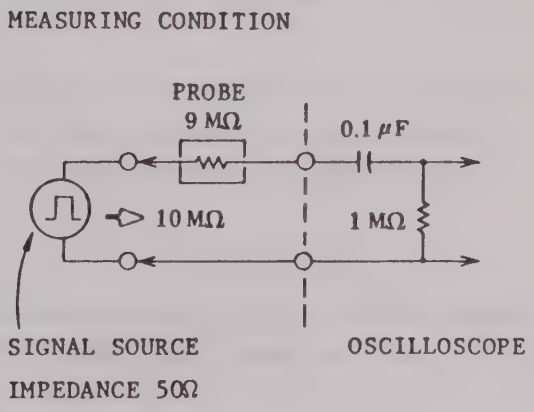

Figure 4-21

As can be seen in the above table, sag is reduced to about 1/10 when the 10:1 probe is used than when the signal is directly fed to the oscilloscope. When the probe is used, however, the input signal voltage is reduced to 1/10. The use of the probe is advantageous when the signal can not be DC-coupled and yet a waveform with less sag is required.

5. MEASUREMENTS

5.1 VOLTAGE MEASUREMENTS

5.1.1 DC VOLTAGE MEASUREMENT

(1) Set the trigger switch in the AUTO mode and the TIME/DIV switch at 1 mS/DIV and display a trace line.

(2) Set the GND pushbutton switch of the vertical input circuit in the GND state. This trace position is used as the reference position (0 V position) for voltage measurement. Move the trace to a convenient position with the POSITION knob.

(3) Set the AC-DC pushbutton switch in the DC state, apply the voltage to be measured to the vertical input terminal, and determine the vertical deflection of the trace on the screen.

(4) If the trace is deflected off the screen upward, turn counter-clockwise the VOLTS/DIV switch to select a lower sensitivity range so that the trace is deflected to an easily measurable position.

(5) If the trace is deflected upward, the porality of the measured signal is positive; if it is deflected downward, the polarity is negative.

(6) Voltage measurement with or without probe

- When the signal is applied directly to the input terminal:

  Voltage V = VOLTS/DIV indication × Deflection (DIV)

- When the signal applied using the 10:1 probe:

  Voltage V = VOLTS/DIV indication × Deflection (DIV) × 10

5.1.2 AC VOLTAGE MEASUREMENT

If the AC-DC switch is set in the DC state when measuring an AC voltage superimposed on a DC voltage and if the DC component is large as compared to the DC voltage, the AC voltage may be deflected off the screen. It may be possible to bring the AC voltage component onto the screen by adjusting the vertical POSITION control. It also is possible to bring the AC voltage component onto the screen by turning the VOLTS/DIV switch to a lower range position.

In general, however, the AC voltage is measured by setting the AC-DC pushbutton switch in the AC state to cut off the DC component and displaying the AC voltage component alone with an appropriate amplitude.

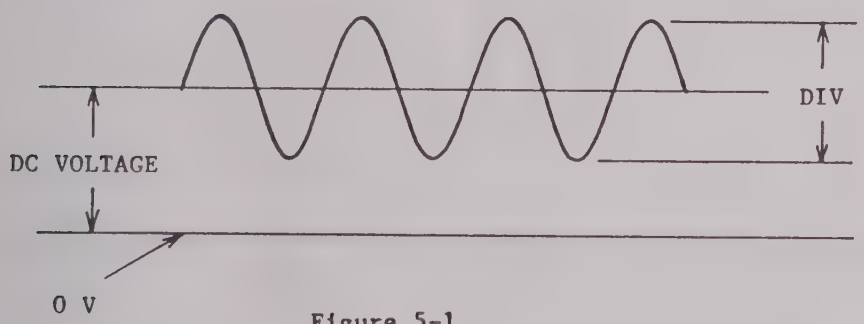

Figure 5-1

From the deflection amplitude (DIV determined on the screen), the voltage is calculated as follows:

Voltage Vp-p = VOLTS/DIV indication × Deflection (DIV)

When the 10:1 probe is used, the voltage is calculated as follows:

Voltage Vp-p = VOLTS/DIV indication × Deflection (DIV) × 10

5.2 MEASUREMENT OF TIME

Measurement of time interval:

The time interval (T) between two points on the waveform can be measured by setting the TIME/DIV VARIABLE knob in the CAL'D position and determining the horizontal distance between the two points on the screen.

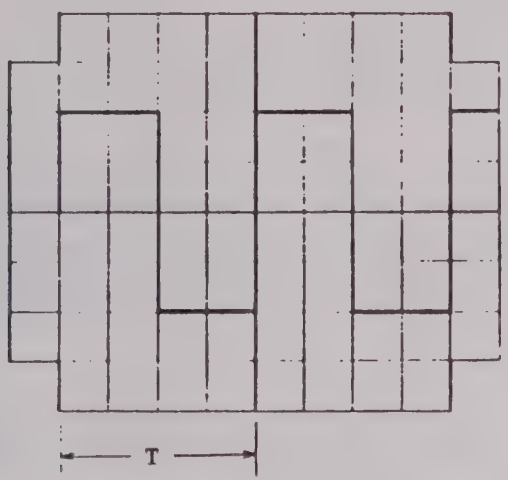

Figure 5-2

Time T (sec) = TIME/DIV (sec) × Distance (DIV) × Magnification factor ..... (A)

The magnification factor is 1 when the sweep is not magnified or it is 1/5 = 0.2 when the sweep is magnified.

5.3 PULSE WIDTH MEASUREMENT

Display the pulse signal in the center of the screen with a horizontal magnitude of 2 - 4 DIV for ease of measurement.

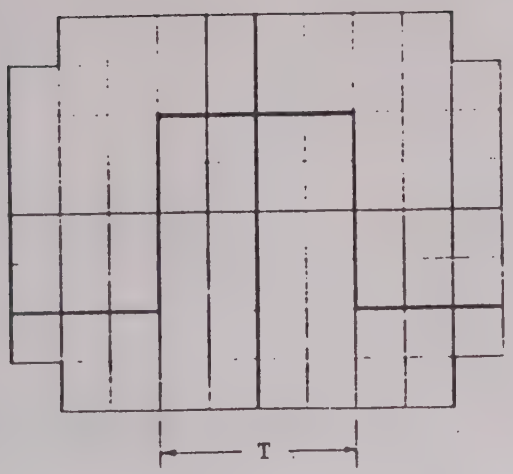

Figure 5-3

Set the TIME/DIV VARIABLE knob in the CAL'D position. When the pulse width is narrow, pull out the 5 × MAG switch as required. Determine the distance T and calculate the width using equation (A).

5.4 MEASUREMENT OF PULSE RISE TIME AND FALL TIME

Determine distance T in the same manner as is done for pulse width measurement and calculate the time using equation (A). When the rise time of the oscilloscope itself (35 nS) is negligible as compared to the measured pulse rise or fall time, the value can be immediately known. When it is not negligible, correct the value using the following equation:

$$Tn = \sqrt{T2 - T_O2 - T_G2}$$

Tn: True value
T: Measured value
T_O: Rise time of oscilloscope, 35 nS (theoretical value)
T_G: Rise time of signal of pulse generator

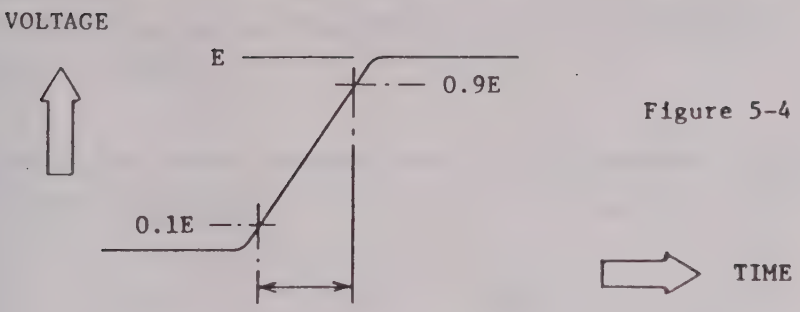

Figure 5-4

5.5 LISSAJOUS MEASUREMENT OF FREQUENCY

When the signal frequency is not higher than 10 kHz and is of a simple waveform such as sine wave, the signal frequency can be measured by operating the oscilloscope as an X-Y scope and displaying a Lissajous figure on the screen. For the X-Y operation, refer to Section 4.3.

MEASURING SETUP

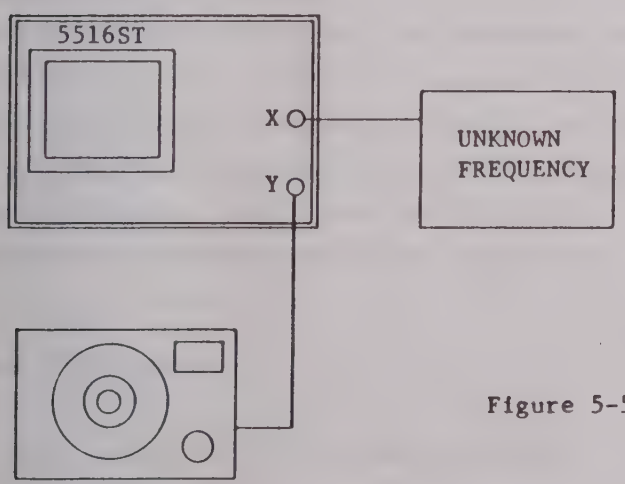

Figure 5-5

Make roughly equal the horizontal and vertical amplitudes of the displayed figure by adjusting the VOLT/DIV switches or VARIABLE controls of both channels.

Gradually change the known frequency until a 1:1 Lissajous figure as illustrated is displayed.

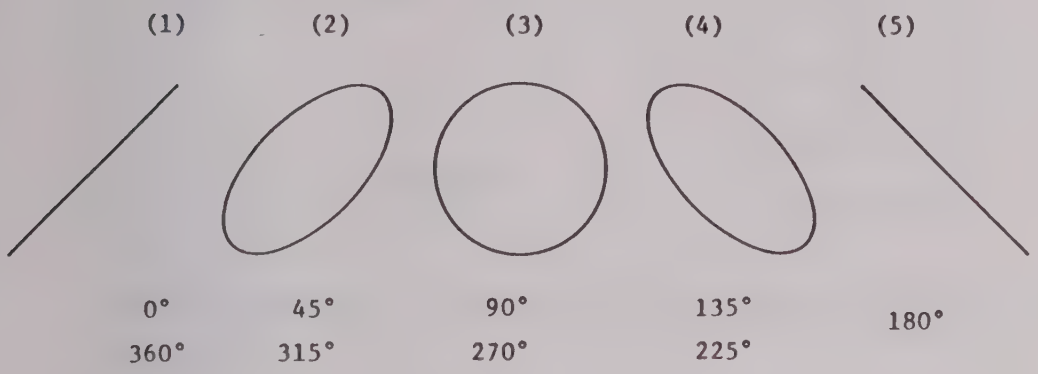

Figure 5-6

When the frequency ratio is 1:1, the displayed Lissajous figure is either a circle, an ellipse, or a line. When the frequency ratio has become close to 1:1, the displayed figure will vary in the sequence of (1) → (5) → (1), repeatedly. As the known frequency becomes closer to the unknown frequency, the change becomes slower. When the two frequencies have become the same, the displayed figure remains stationary in a pattern of one of (1) - (5). Now the unknown frequency is the same as the known frequency.

5.6 PHASE MEASUREMENT

(1) Phase measurement with Lissajous figure:

In the same method as that for frequency measurement, operate the oscilloscope in the X-Y mode and display a Lissajous figure.

Operate the X-axis and Y-axis amplifiers at as large sensitivity as possible. Determine distances A and B on the screen and calculate the phase difference using the following the equation:

$$\text{Phase difference } \theta = \sin^{-1}\frac{A}{B}$$

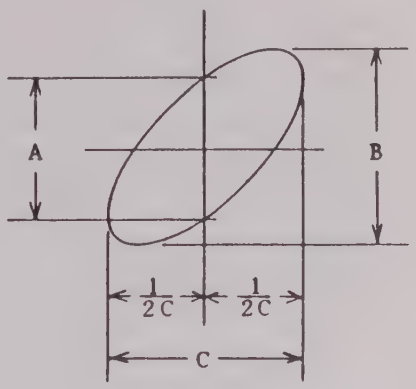

Figure 5-7

Phase measurement in the Lissajous figure method has disadvantages as follows:

(1) With the conventional oscilloscope, the frequency response of the X-axis is narrow and a large phase difference is caused by the oscilloscope itself.

(2) Phase difference measuring accuracy is comparatively poor.

Due to the above reasons, the dual-channel method explained next is recommended when more accurate phase difference measurement is required.

(2) Phase difference measurement in dual-channel method:

Set the vertical-axis MODE switch in the DUAL state and press the TRIGGER CH1 button. Apply the reference signal to CH1 and the measured signal to CH2 so that the waveforms are displayed as illustrated.

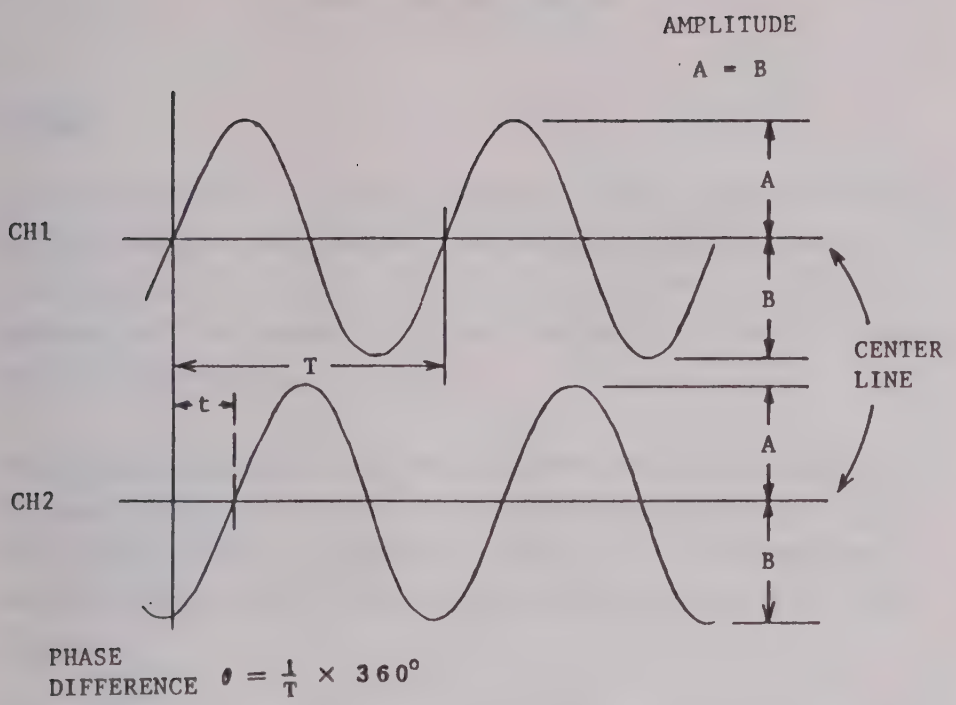

Figure 5-8

Display waveforms as large as possible by increasing the signals applied to CH1 and CH2 or increasing the sensitivities of both channels.

Center both signals around a graticule (A=B). If probes are to be used, use probles for both channels and adjust accurately the phase characteristics of both channels using the CALIB signal.

The phase difference measurement in the dual-channel method has the advantages that even a small phase difference can be measured and the leading or lagging state can be known at a glance.

6. OPERATION DESCRIPTION

6.1 GENERAL

The OSCILLOSCOPE is a visual instrument (SCOPE) for observation of electrical signal change. Its circuits operate so that its input signal is displayed in an easily observable form on a cathode-ray tube screen. A block diagram of the oscilloscope is shown in Figure 6-1.

The signal applied to the vertical input axis is amplified by the vertical amplifier and the amplified signal is applied to the Y-axis deflection plates of the CRT. The electron beam emitted from the CRT cathode is vertically deflected by this signal.

Additionally, the vertical signal is branched off and amplified by the trigger amplifier to produce a trigger pulse signal which is synchronized with the vertical signal. The trigger pulse signal is applied to the sweep generator circuit which produces a sawtooth signal. The sawtooth signal is amplified by the horizontal amplifier and applied to the X-axis deflection plates of the CRT in order to deflect the electron beam in the X-axis direction. Thus, a stationary waveform being synchronized with the input signal is displayed on the CRT screen.

The Z-axis amplifier controls the brightness of the trace. Its output is applied to the CRT so that the unrequired portion of the signal is blanked out.

The storage circuit store the displayed waveform on the CRT screen. It generates an erase signal when the sweep operation is over.

The power supply circuit and high voltage supply circuit provide the required voltages to the functional circuits and CRT. The calibration voltage generator circuit provides a quality square wave signal for calibration of the probe.

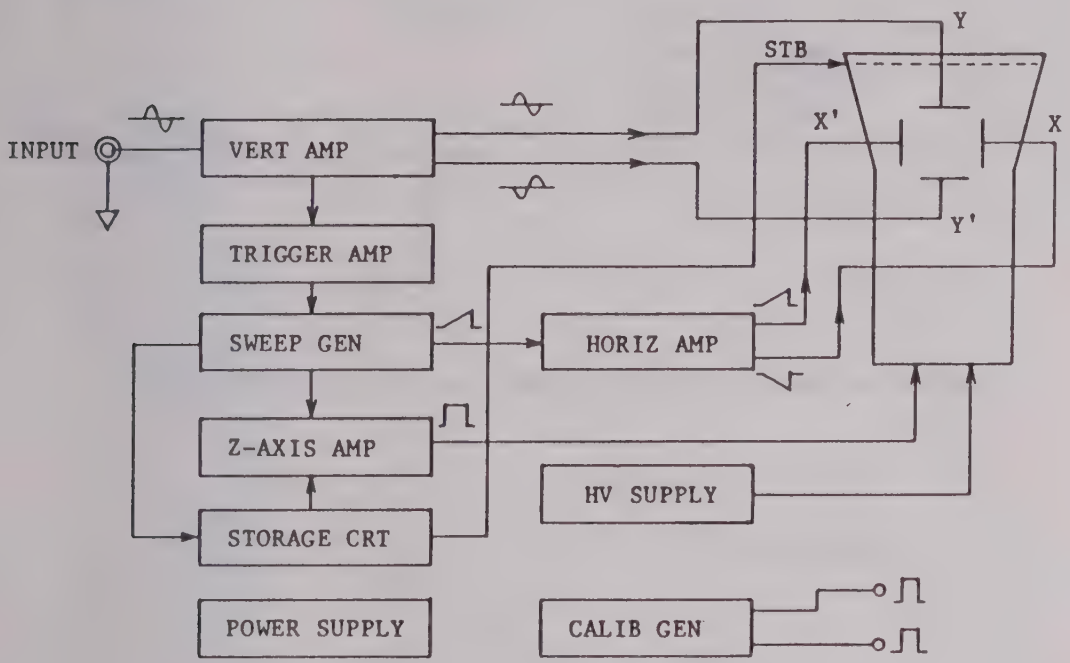

Figure 6-1. A block diagram of the oscilloscope

6.2 VERTICAL AMPLIFIER

The vertical amplifier deflects the beam in the Y-axis direction on the CRT screen. It has an input circuit, an attenuator, a preamplifier, a CH1/CH2 selector circuit, and an output stage amplifier the output of which is applied to the Y-axis deflection plates of the CRT. All circuits from the preamplifier to the Y-axis deflection plates are of a differential circuit type.

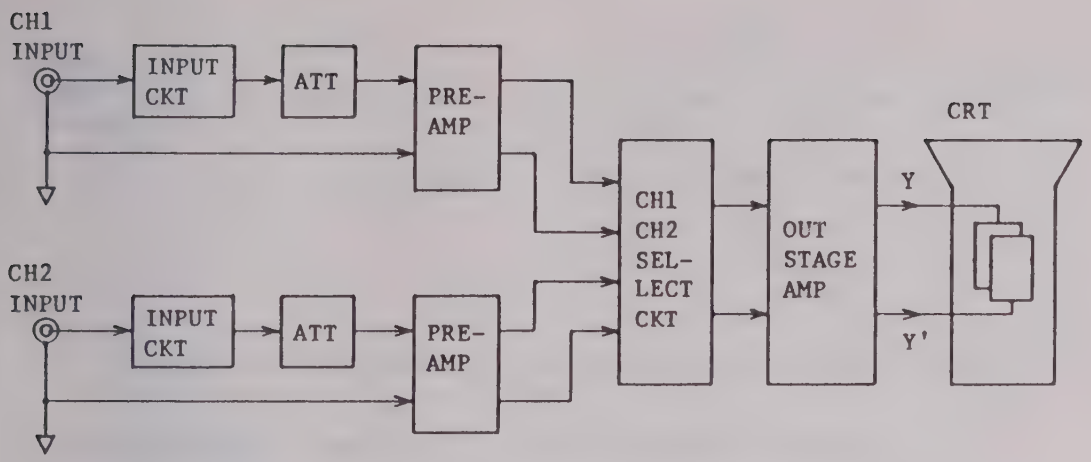

Figure 6-2. A block diagram of the vertical amplifier

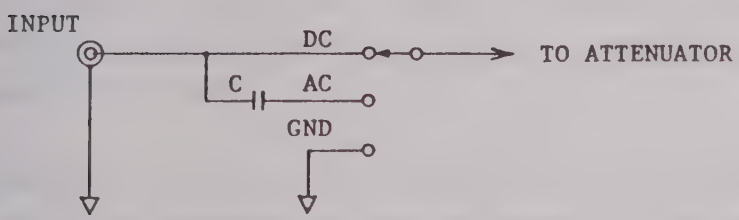

Figure 6-3. The input circuit

The input circuit selects the input mode for DC, AC, or GND. The DC coupling mode is for measurement of a DC signal, the AC coupling is for observation of an AC signal superimposed on a DC component, and the GND position is for confirming the zero level position on the CRT screen.

The function of the attenuator circuit is to reduce the input signal with selectable ratios. With combinations of the 1/2, 1/4, 1/10 and 1/100 attenuation circuits, a total attenuation range of 1/2 to 1/2000 can be covered. The attenuator circuit is designed so that the impedance as viewed from the input side remains constant even when conbinations are changed.

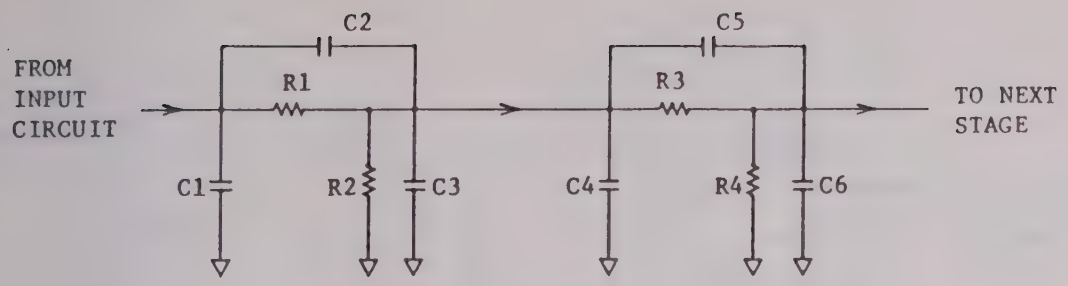

Figure 6-4. An example of combination of attenuator circuits

The preamplifier consists of an input protection circuit, an impedance converter circuit, a differential converter circuit, a trigger signal amplifier circuit, and a polarity switching circuit (for CH2 only).

The input protection circuit has a diode to clamp the input signal when its voltage is abnormally large, in order to protect the subsequent circuits.

The impedance converter circuit provides a large input impedance and a small output impedance in order to prevent loading on the attenuator circuit to ensure reliable attenuation ratios and to provide the signal with a sufficiently low output impedance for the next stage. This circuit employs dual FETs which operate as a source follower with a constant current circuit. An emitter follower is used in addition. The FETs employed are two premium-quality chips of equal characteristics sealed in one package attaining excellent thermal balance. The transistors of the emitter follower also are premium-quality matched-characteristic ones and are positioned closely on the printed circuit board to ensure thermal balance.

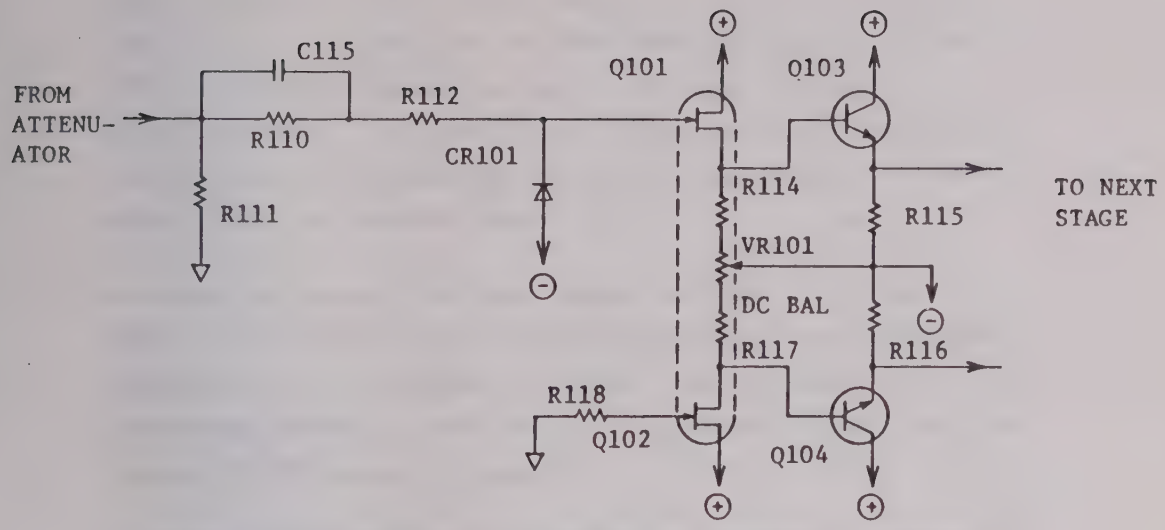

Figure 6-5. The input protector and impedance converter

For the converter circuit, a differential cascade amplifier is used. For differential coupling, a constant-current circuit is used to improve the commom-mode characteristics.

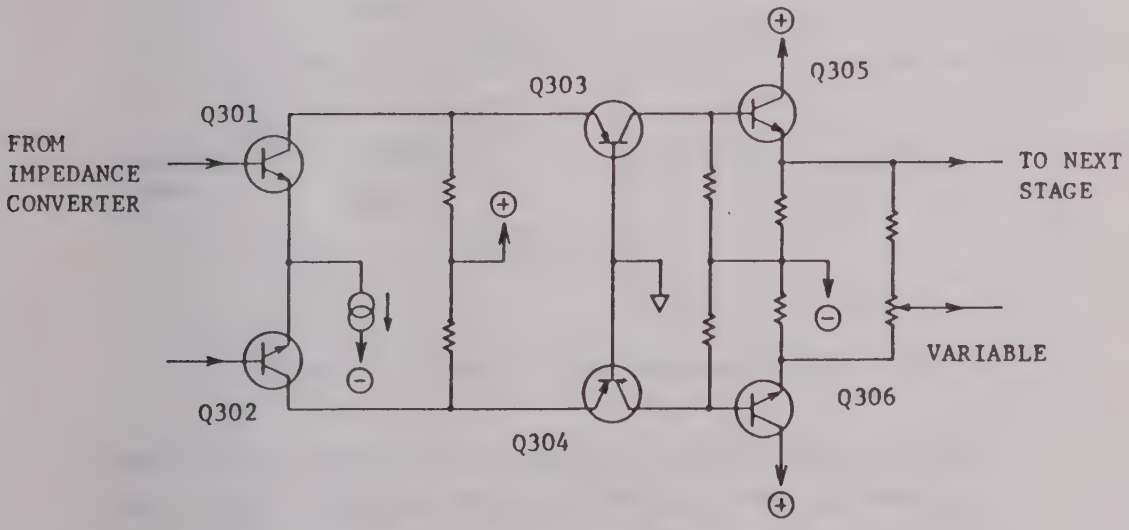

Figure 6-6. The preamplifier (front stages)

The positioning circuit also employs a differential cascade amplifier of the same type as that shown in Figure 6-6 and the differential balance is varied on purpose to move the trace position. The polarity switching circuit provides an inverted output by changing the connections between cascade circuits to the opposite polarity.

As explained above, the input signal applied to the oscilloscope is attenuated to an appropriate level by the attenuator, converted into a differential signal, fed through the required functional circuits, amplified by the output circuit, and fed to the CH1/CH2 selector circuit.

The selector circuit selects channel 1 or channel 2 depending on the front panel switch setting.

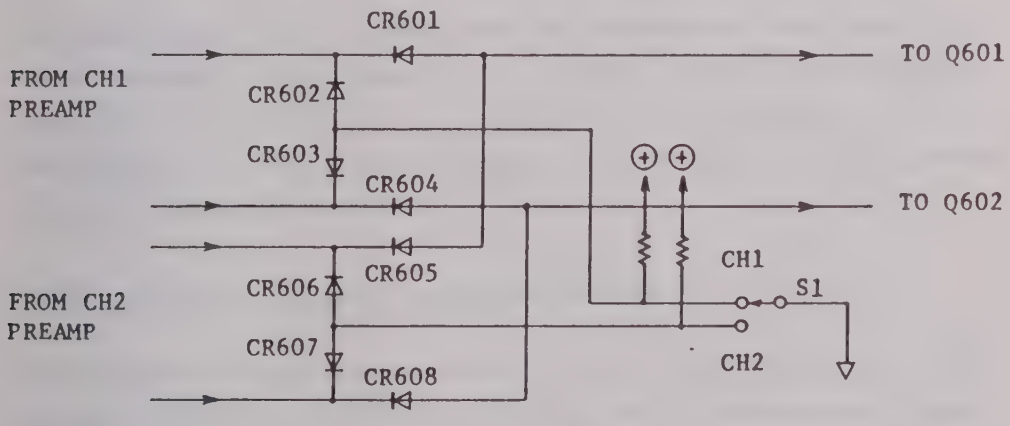

Figure 6-7. The CH1/CH2 selector circuit

Assume that S1 has been connected to the CH1 side. In this case, diodes CR602 and CR603 are OFF and CR606 and CR607 are ON, and the signal switching diodes (CR601 and CR604) of CH1 are on and those (CR605 and CR608) of CH2 are off. Therefore, the CH1 signal alone is fed.

When switch S1 is connected to the CH2 side, the operations are in the reverse of the above and the signal of the CH1 preamplifier is fed to Q601 and Q602.

Switch S1 actually is an electronic switching circuit (a NAND gate circuit made up of U502-1 and U502-2) and is capable of rapid switching for the CHOP operation.

The CH1/CH2 selector circuit is connected between input and output stages of the cascade amplifier and operated in a low-impedance current mode in order to minimize effects to other circuits. The output stage of the cascade amplifier converts the current signal into a voltage signal and this voltage signal is fed to the emitter follower which drives with sufficiently low impedance the power amplifier.

The power amplifier is a differential cascade amplifier and employs high-f_T drive transistors and high-voltage high-frequency transistors in combination. It provides sufficient power for deflecting the electron beam, ensuring excellent frequency response and phase characteristics.

6.3 TRIGGER CIRCUIT AND SWEEP GENERATOR CIRCUIT

The trigger circuit selects the CH1, CH2 or NORM internal trigger signal, or the external trigger signal, and it produces a trigger pulse signal which is synchronized with the input signal so that a stationary waveform can be displayed on the CRT screen.

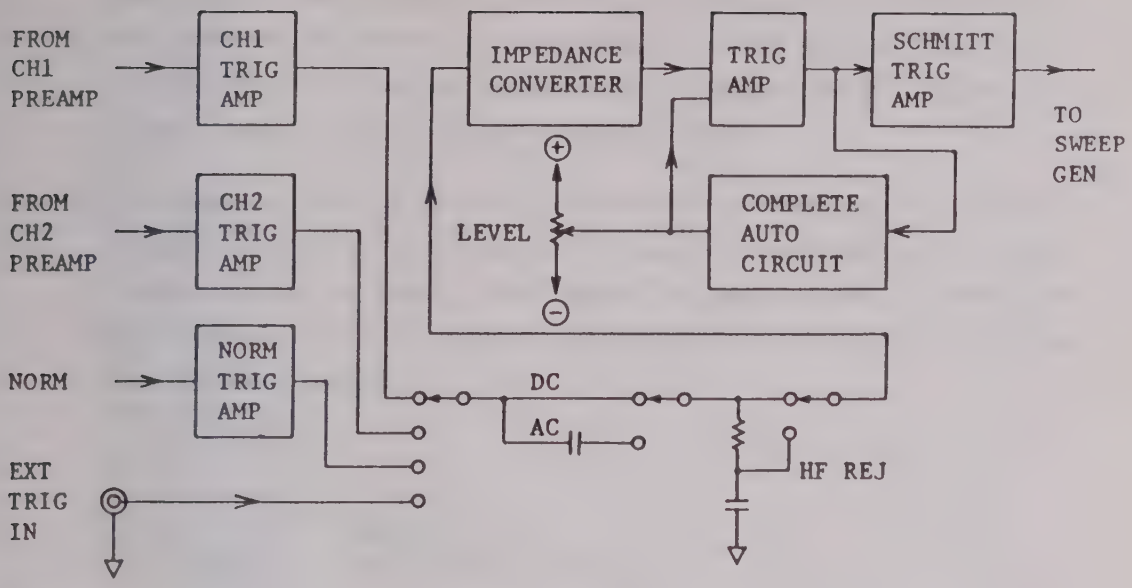

Figure 6-8. A block diagram of the trigger circuit

The input signals amplified by the CH1 and CH2 amplifiers and selected by the CH1/CH2 selector circuit, to gether with the amplified NORM signal, are amplified further by the CH1, CH2 and NORM trigger amplifiers. The resultant signals, together with the external trigger signal, are fed to the trigger source selector circuit. The selected trigger source signal is fed through the AC/DC trigger coupling circuit and NORM/HF REJ circuit to the impedance converter circuit.

The impedance converter circuit employs a source follower comprised of a dual-FET constant-current circuit to provide low output impedance. The trigger signal is amplified further by the trigger amplifier. At the same time, an offset signal is applied to the amplifier to control the trigger level.

The COMPLETE AUTO circuit receives the trigger amplifier output and provides an automatic offset signal to the trigger amplifier in order to maintain the trigger level always within the peak to peak range of the trigger signal waveform.

The output signal of the trigger amplifier is fed to the Schmitt trigger circuit which produces a trigger pulse signal of a sharp rising or falling edge. The Schmitt trigger circuit is comprised of an R-S flip-flop. Switching of trigger slope is done by using its inverted output.

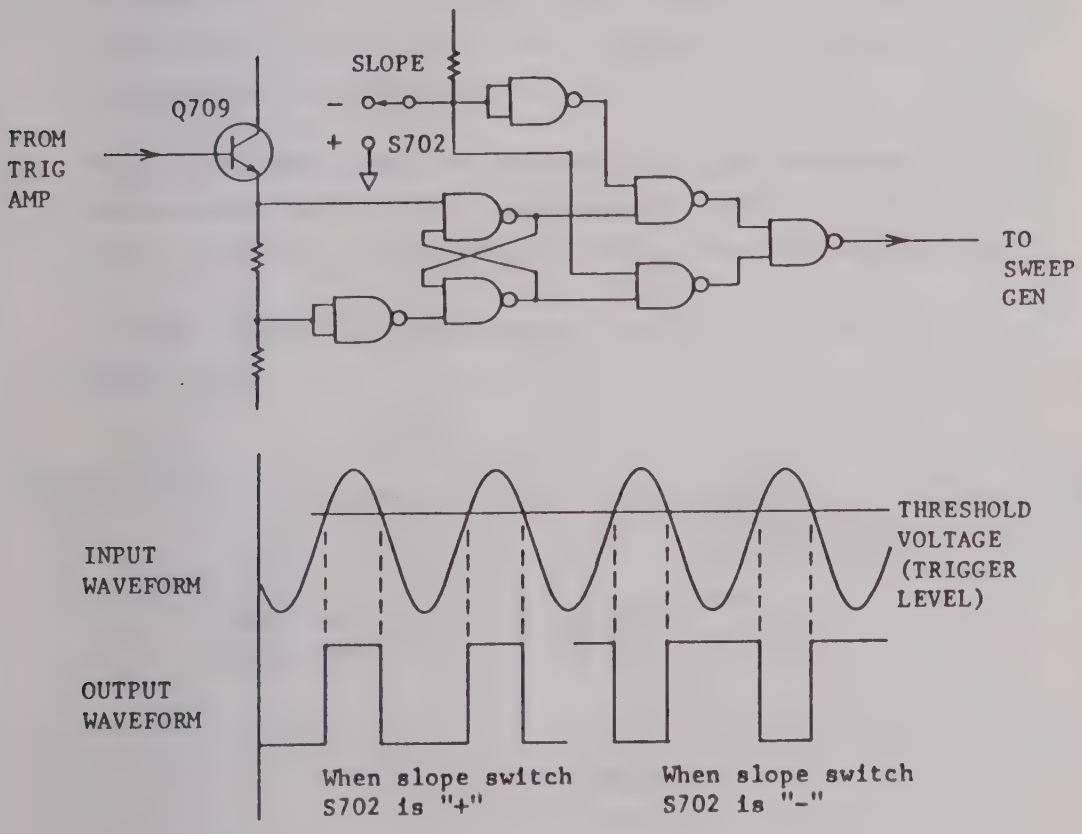

Figure 6-9. The trigger pulse generator circuit and timing chart

The trigger pulse signal generated as above is applied to the sweep signal generator circuit of the next stage, which with its Miller integration circuit generates a sawtooth signal.

Most oscilloscopes employ a Miller integration circuit for their sweep circuit and incorporate a gate circuit to control generating timing of the sawtooth wave. By synchronizing the timing of sawtooth signal generation with the trigger pulse signal, the displayed waveform can be maintained stationary.

If no trigger pulse is applied, the oscilloscope operates in the FREE RUN mode. This mode is such that when one sweep is over the next sweep starts. With this mode the displayed waveform cannot remain stationary.

When in the NORM mode, the sawtooth signal is generated in synchronization with the trigger pulse. Unless the trigger pulse is applied, no sweep occurs and no waveform is displayed.

A block diagram of the sweep generator circuit is shown in Figure 6-10.

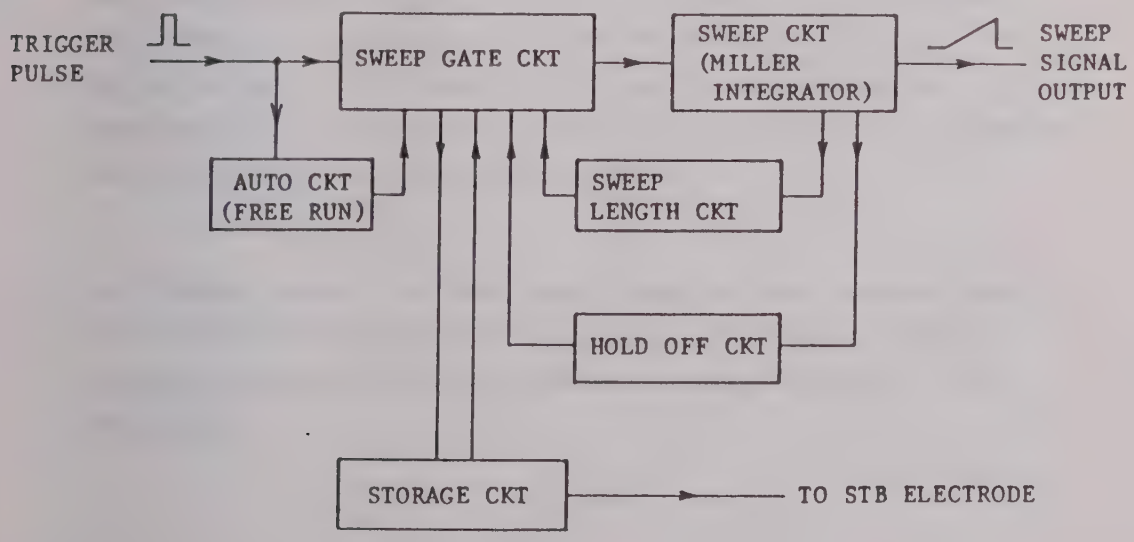

Figure 6-10. A block diagram of the sweep generator

The trigger pulse signal which is applied to the sweep gate circuit is applied also to the AUTO circuit in order that, when the TRIGGER MODE switch on the front panel is set in the AUTO (or COMP MODE) mode, the sweep circuit is driven by a trigger signal if it is applied and operates in the automatic trigger mode if no trigger signal is applied.

When the TRIGGER MODE switch is set in the NORM or SINGLE mode, the AUTO circuit is disconnected. The sweep circuit is driven by a trigger signal applied or it does not operates if no trigger pulse is applied.

When the output signal of the Schmitt trigger circuit is applied to the sweep gate circuit, it produces a sweep start command signal. In compliance to this command signal, the sweep circuit starts its integration operation and its output voltage increases at a certain rate. When the output voltage has reached a certain value, the sweep length circuit operates and produces a pulse. As this pulse is applied, the sweep gate circuit generates a sweep stop command signal so that the charge of the Miller integrator capacitor is rapidly discharged and the output voltage of the sweep circuit returns to zero. The sweep circuit remains in this state for a period as dictaded by the holdoff circuit (the period differs by the range of the sweep time selector switch). When the next trigger pulse is applied, the sweep circuit repeats the above operation. (See Figure 6-11.)

The STORAGE circuit has functions of storing the displayed waveform in synchronization with the sweep signal and of stopping the sweep operation during the waveform storage period or the erase period.

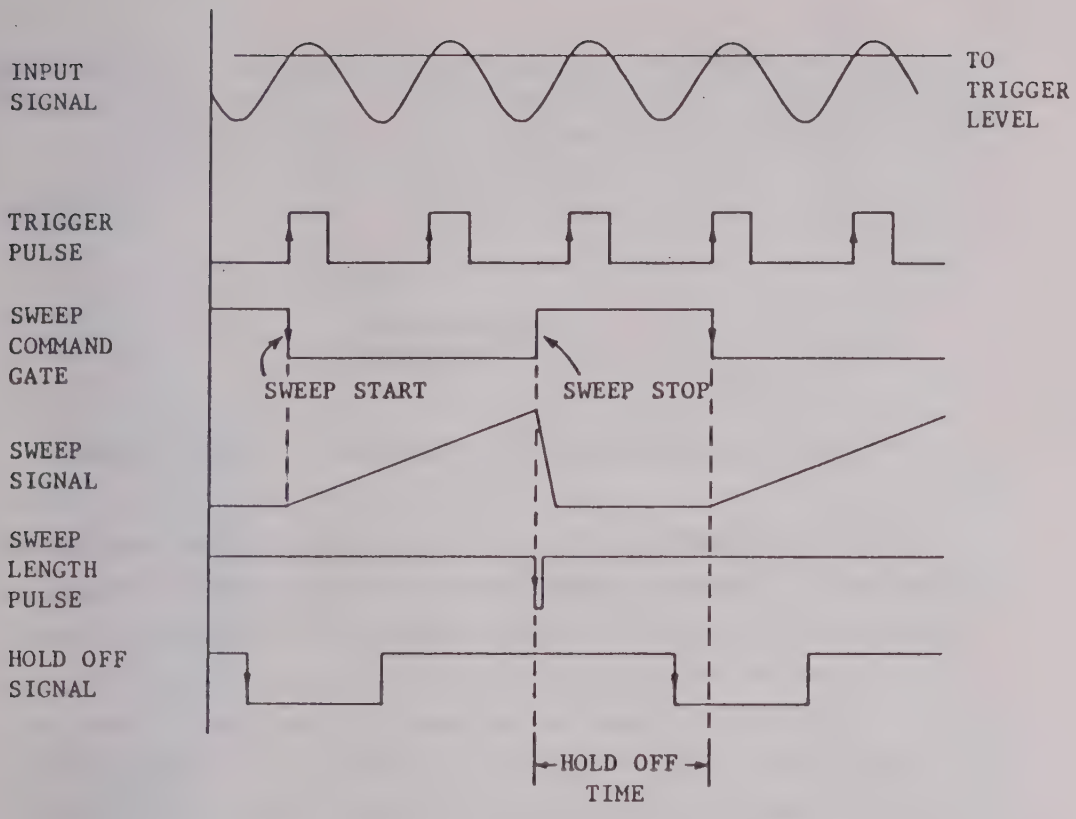

Figure 6-11. A timing chart of the sweep circuit

The sweep signal produced as above is applied, together with the X signal when in the XY operation, to the horizontal signal selector circuit which selects either one of these signals as dictated by switch setting on the front panel. The selected signal is fed to the horizontal amplifier.

6.4 HORIZONTAL AMPLIFIER

The horizontal amplifier amplifies the signal for deflecting the beam spot in the X-axis direction on the CRT screen. It is comprised of a horizontal signal selector circuit and an output amplifier (with ×5 MAG circuit).

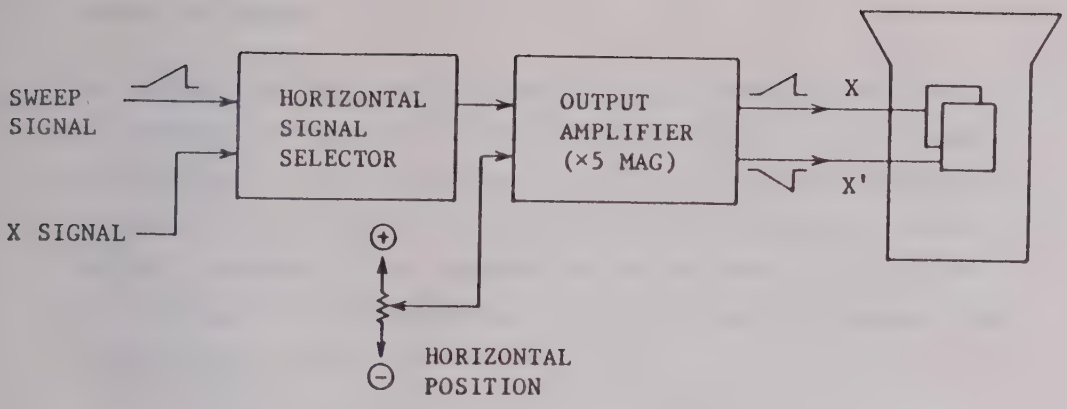

Figure 6-12. A block diagram of the horizontal amplifier

Either the sweep signal or the X signal is selected by the horizontal signal selector circuit (relay circuit). The selected signal is applied to the output amplifier. The output amplifier is a differential cascade amplifier with emitter followers for its input stage, and the signal to be measured is applied to one input circuit and the horizontal position signal to the other input circuit. This amplifier has a 5-time sweep magnification function, accomplished by changing the impedance of the differential coupling circuit of the cascade-connected input stage.

The differential horizontal signal obtained as above is applied to the horizontal deflection plates of the cathode-ray tube to deflect horizontally the beam spot on the CRT screen.

Due to the above functions, if a sweep signal which is synchronized with the input signal is being generated, the input signal is displayed as a stationary waveform on the CRT screen. If the oscilloscope is operating in the XY mode, a Lissajous figure is displayed.

6.5 Z-AXIS AMPLIFIER

The function of the Z-axis amplifier is to vary the intensity of the beam spot for trace brightness adjustment as controlled with the INTEN knob on the front panel, for intensity modulation of the displayed trace with an external signal applied to the Z AXIS IN terminal, for blanking the return sweep traces, and for erasing the switching noise of the vertical axis signal when in the chopping mode.

The sweep gate signal or the CHOP blanking signal when in the dual-channel CHOP mode as selected with switches on the front panel is automatically applied to the input of the Z-axis amplifier. When an external signal is applied to the Z AXIS IN terminal, the CRT trace intensity can be directly driven with the signal regardless of panel switch setting.

The Z-axis amplifier amplifies its input signal to a sufficiently high level to drive the CRT. It is of cascade connection, active load type and a negative feedback circuit is incorporated in order to suppress the effect of line voltage variation.

The output signal of the Z-axis amplifier is shifted into a high voltage by the high voltage circuit explained in a subsequent subsection and, then, it is applied to the grid (G1) of the CRT.

6.6 STORAGE CIRCUIT

The function of the storage circuit is to keep the displayed trace on the CRT screen for a controllable period of time. This storage function is accomplished by means of a readout gun and back electrodes. A block diagram of the storage circuit is shown in Figure 6-13.

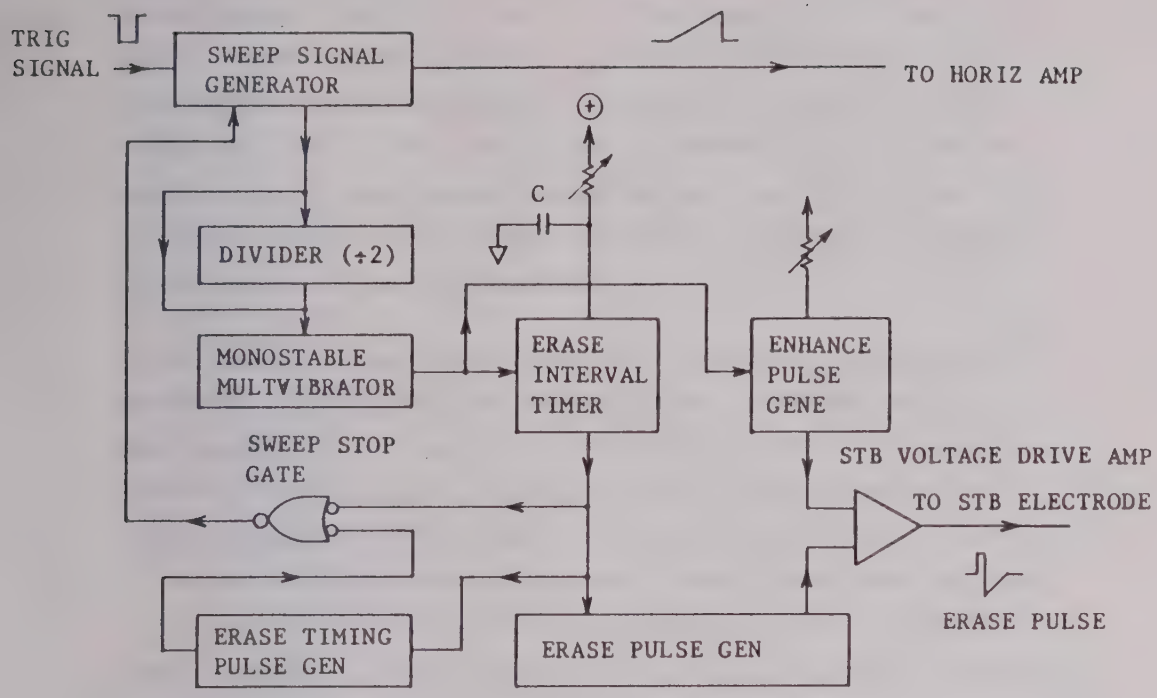

Figure 6-13. A block diagram of the storage circuit

To understand the operation of the storage circuit, knowledge of the BHD type storage tube is necessary. For this tube, refer to its explanation given elsewhere. (See page 71.)

Assume that the voltages applied to the storage CRT are for the storage state. As the trigger signal is applied to the sweep signal generator circuit, a sweep starts and the storage operation begins on the CRT screen. At the instant the sweep has ended, the monostable multivibrator is driven by the sweep stop signal which is produced in the sweep signal generator circuit. (When this is done, the divider circuit is brought into effect provided that the dual-trace ALT sweep mode (excluding the SINGLE mode) is selected. If in other mode, the sweep stop command signal is fed bypassing the divider circuit.) The monostable multivibrator

converts the sweep stop command signal into a pulse signal which has an appropriate pulse width for handling by the erase interval timer. As the pulse signal is applied to the erase interval timer and it starts operating, its output is applied via the sweep stop gate to the sweep signal generator circuit, thereby inhibiting the sweep operation during the period the timer is operating. Thus the displayed waveform is maintained during the period the timer is in operation.

At the instant the timer period has elapsed, an erase pulse is generated. The erase pulse is amplified by the STB voltage drive amplifier and applied to the STB electrodes of the CRT to erase the stored trace. Since a period of approximately 0.5 second is required for erasure, a pulse signal of approximate 0.5 second is generated by the erase timing pulse generator and this signal is applied via the sweep stop gate to the sweep signal generator circuit in order to inhibit the sweep operation regardless of application of the trigger pulse.

When the oscilloscope is in the storage state, a waveform can be recorded (stored), held and erased as explained above. These functions can be selected as required. For example, when the oscilloscope is in the storage state but not in the auto erase state, the timer does not operate and the storage action alone is repeated each time the trace is swept.

The enhancement function is as follows: This function is effective when the sweep speed is very high and the storing rate on the screen is insufficient. Actually, it is effective for a range or two faster than the maximum storing speed range in the regular mode. In such a range or two, the trace is in such state that it

can be stored if a slightly higher energy is applied. When in this state, the storing effect can be pulled up to the display level by applying an additional energy by means of an enhancement pulse. At the instant the sweep is over, the enhancement pulse generator circuit produces an enhancement pulse. This pulse is amplified by the STB voltage drive amplifier and applied to the STB electrode. Due to this additional pulse, energy distribution on the screen is temporarily pulled up to a level suffient for storing. At the end of the pulse, energy distribution returns to the original level. (For further details, refer to the section for the recording speed enhancement method of the storage CRT.)

When the sweep speed is faster by far, no storing can be occured even if the enhancement pulse is applied.

The degree of enhancement is adjustable by adjusting the enhancement pulse signal.

6.7 HIGH VOLTAGE CIRCUIT

The high voltage circuit produces a high negative voltage of approximately 2 kV to accelerate the electron beam. It is a DC-DC converter with a blocking oscillator. A high-insulation high-voltage transformer is used for isolation between low voltage circuit and high voltage circuit. The high output voltage of the transformer is double-voltage rectified to produce a high-voltage DC output. Part of the output voltage is fed back through a high-voltage feedback resistor to the blocking oscillator in order to obtain a stable acceleration voltage.

6.8 POWER SUPPLY

The power supply circuit provides DC voltages required by the various circuits of the oscilloscope. Supply voltages are regulated as required. To attain good insulation between the line power and the internal circuits, this oscilloscope employs a specially designed transformer. A block diagram of the power supply is shown in Figure 6-14.

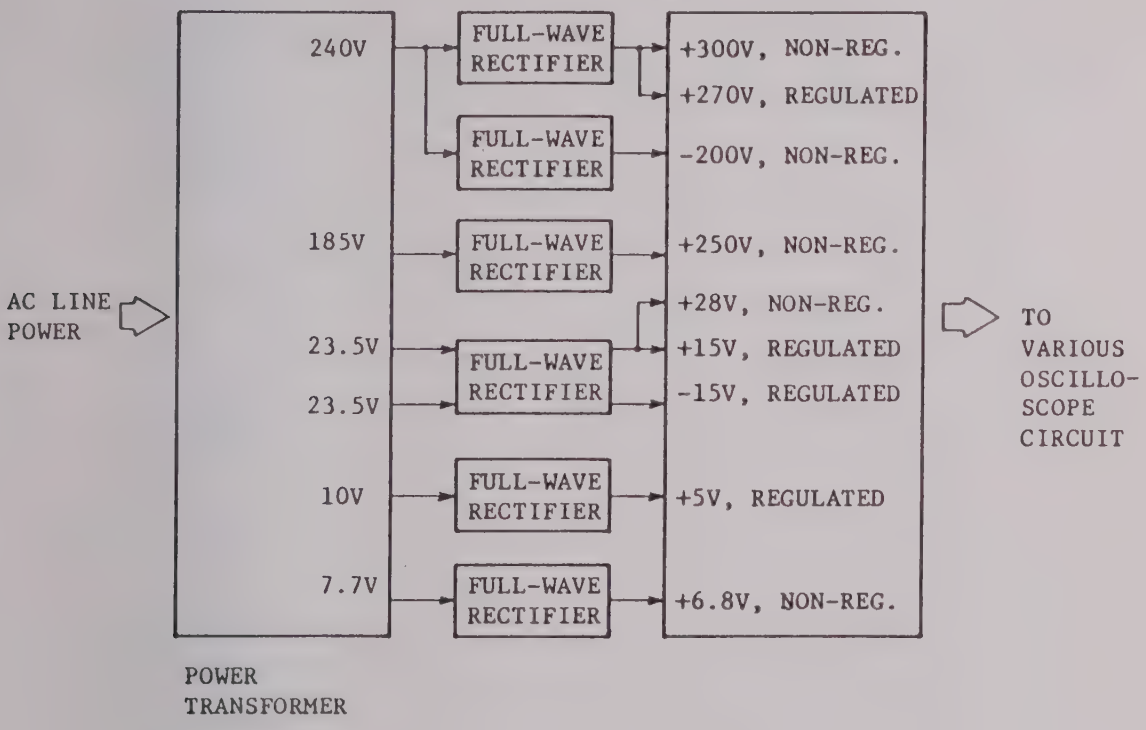

Figure 6-14. A block diagram of the power supply

6.9 CALIBRATION VOLTAGE GENERATOR

The calibration voltage generator produces a quality square wave signal, with less sag and overshoot, to calibrate the phase characteristics of the probe, etc. The generator employs a TTL multivibrator. The output voltage is divided with resistors to produce a 2 Vp-p signal and a 200 mVp-p signal. The output signal is delivered to the terminal which has a hole for easy connection of the probe.

7. STORAGE TUBE

7.1 STRUCTURE OF STORAGE TUBE

Figure 7-1

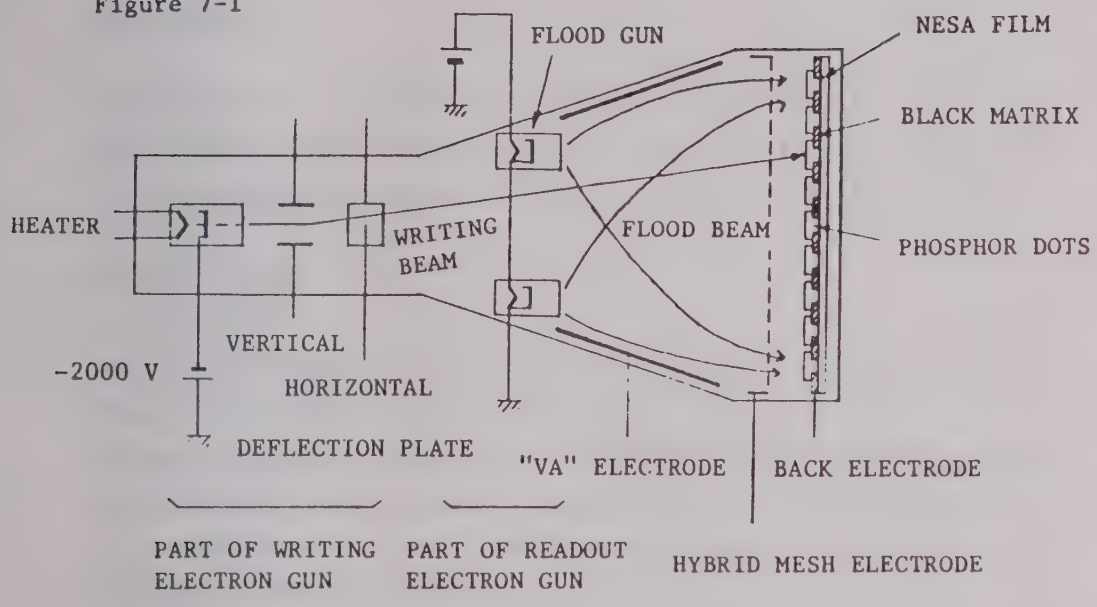

(a) The writing electron gun:

The function of this gun is the same with that of the regular CRT. It produces an electron beam which hits the storage target screen which is composed on Nesa film, black matrix and phosphor dots.

(b) The readout electron gun:

This electron gun (flood gun) is characteristic to the storage tube. It rains out a flood of electrons (flood beam) to over-all surface of the storage target so that the stored waveform is maintained in the displayed state.

(c) VA electrode:

Provides a weak electron lens for producing a flood beam which is applied to overall storage surface in the perpendicular direction.

(d) Hybrid mesh:

Has functions of capturing secondary electrons emitted from the storage target surface and repelling positive ions produced in the electron gun side, in order to protect the storage plane.

(e) Storage target:

The storage target is composed of transparent conductive film (Nesa film), black matrix and phosphor dots (insulators). It stores the charged pattern and, when the readout beam is applied, displays the stored pattern. When the oscilloscope is operated as a regular oscilloscope, the storage target operates as a regular fluorescent screen.

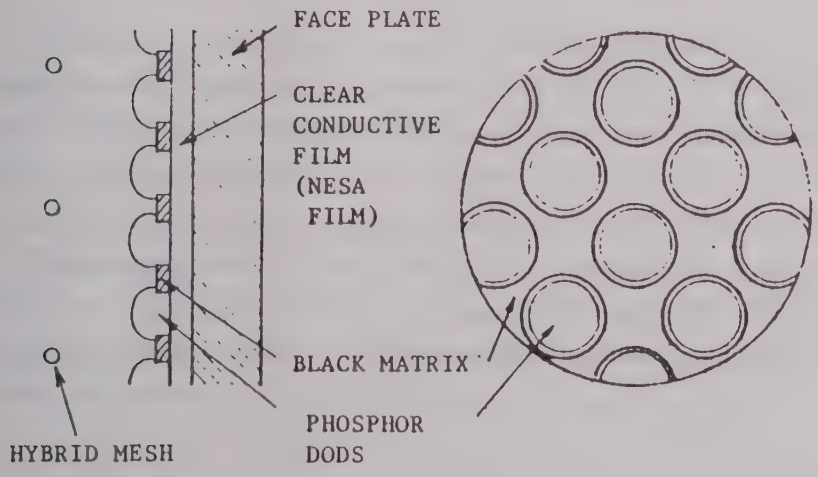

Figure 7-2

7.2 STORAGE PRINCIPLE

When an insulator in an electric field is bombarded with primary electrons, secondary electrons are emitted from the insulator. The rate of emission of secondary electrons depends on the energy of the primary electrons (the strength of the electric field or the acceleration voltage). The storage function is attained making use of the fact that the secondary-electron emission ratio becomes larger than 1 as shown in figure 7-3.

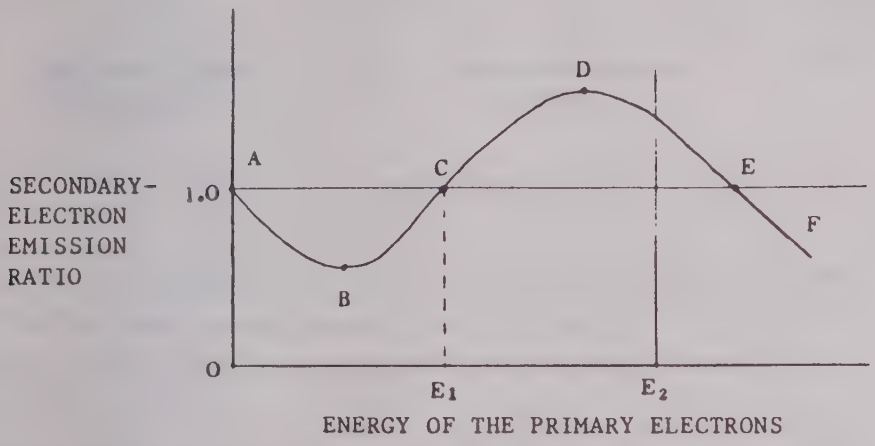

Figure 7-3

As shown in Figure 7-3, as the energy of primary electrons is increased the secondary-electron emission ratio at first is reduced but, as the potential is increased further, the ratio starts increasing and the ratio becomes larger than 1. As the potential is increased still more, the ratio starts decreasing and finally falls below 1. The storage tube of this oscilloscope employs a phosphor material for the insulator. With this material, E_1 is 20 - 70 V and E_2 is approximately 180 V. The characteristics of an actual storage tube are shown in the illustration.

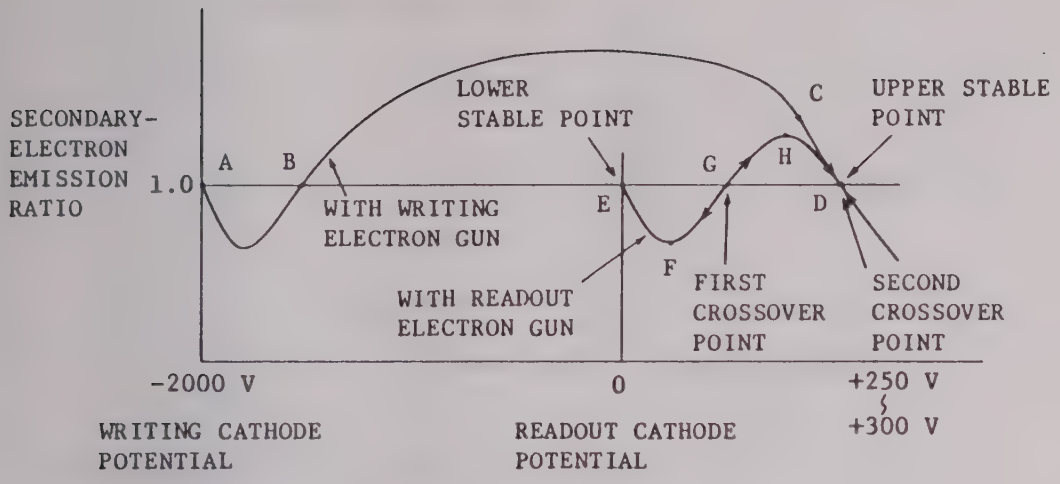

Figure 7-4

In the illustration, point D is the upper stable point and point E is the lower stable point. As the tube has two stable points, this type of tube is called bi-stable storage tube.

Point G moves upward or downward depending on slight change in potential. This point is called unstable point (1st crossover point). (Point D is called also as 2nd crossover point.)

In practice, E_{STB} (back electrode voltage) is varied (0 - 300 V) so that the surface voltage of the phosphor dots are varied along points E - F - G - H - D on the curve.

7.3 STORAGE OPERATION

The storage operation of the tube in the due order of actual actions are as follows:

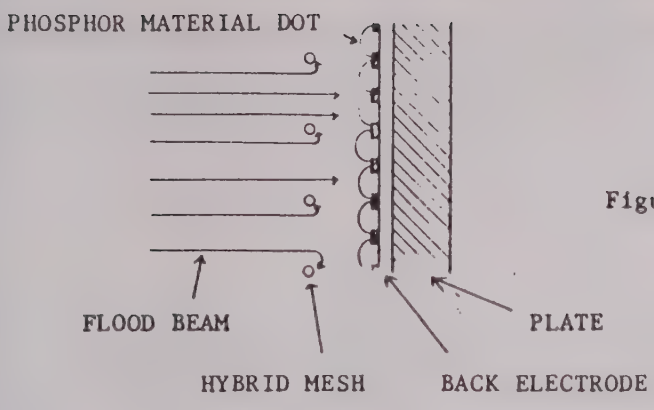

Figure 7-5

(A) Preparation for writing (ready state)

When in this state, E_{STB} which may vary for each tube is applied to the back electrode. To the hybrid mesh electrode, the highest voltage (approximately 300 V) among the internal electrodes of the tube is applied.

As the voltage is applied to the back electrode, the potential of the phosphor dot surface is raised to the same voltage. However, due to the flood beam, it is lowered to the readout gun cathode voltage (0 V).

The above is the state ready for writing. There is a potential difference E_{STB} between back electrode and phosphor dot surface. This differential potential is maintained by the high insulation of the phosphor itself.

(B) Writing

As the writing beam is applied to the storage target in the ready state, the protruding phosphor dots are excited and become luminous and, at the same time, emit secondary electrons. The secondary electrons and the writing beam electrons are absorbed by the back electrode and hybrid mesh electrode. As

the high-energy writing beam is applied, the rate of emission of secondary electrons becomes larger than the writing beam. Therefore, the surface potential of phosphor dots shifts toward the back electrode voltage (E_{STB}) from 0 V.

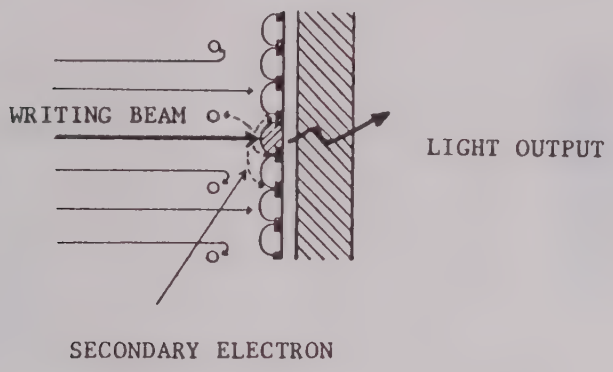

Figure 7-6

(C) Readout (storage)

Once the state of (B) has been established, even if the beam is turned off, the phosphor dots to which the writing beam has been applied remain luminous as their surface voltage remains 180 V so far as the readout beam is applied.

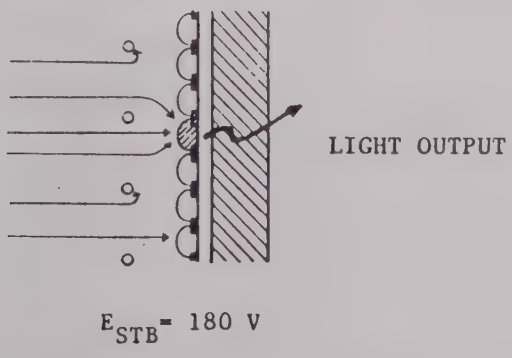

Figure 7-7

(D) Erasure

The displayed image can be erased by making the back electrode potential zero volts so that the storage phosphor surface potential also becomes zero volts. For erasure, and erase pulse voltage as illustrated is applied to the back electrode.

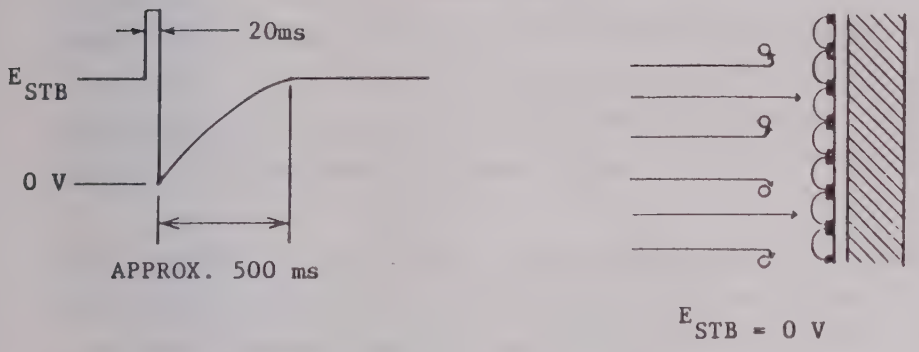

Figure 7-8

7.4 GENERAL CHARACTERISTICS

7.4.1 HYSTERESIS CHARACTERISTICS

Voltage E_{STB} which is applied to the back electrode is a cardinally important voltage of the storage tube. The relationship between E_{STB} and storage screen intensity is as illustrated.

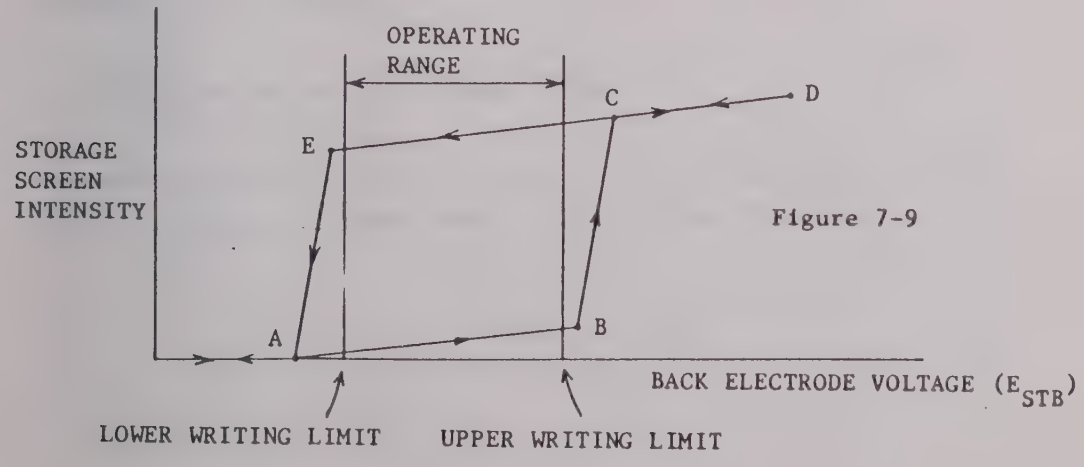

Figure 7-9

Refering to the illustration, a positive potential is applied to the back electrode so that the back electrode voltage (E_{STB}) is moved from point 0 to point A. Between 0 and A, no change is caused to the storage tube. (The erase state is maintained and no dots are luminous on the screen.) As the potential is raised in the positive direction, overall screen becomes slightly luminous (only dimly lighted, rather than luminous). This range corresponds to range A - B in the illustration. When a voltage higher than point B is applied, overall screen becomes quite luminous. This is the state of point C. If the voltage is raised still further, brightness of the screen is increased slightly more. Point D denotes the state when a voltage of approximately 300 V is applied.

Now, assume that the voltage is gradually lowered from point D. When point C has been passed, the curve does not return to point B but moves toward point E. Down to point E, the screen becomes darker in proportion to the voltage. When point E has been passed, the screen becomes darker at a high rate and the curve returns to point A.

As mentioned in the illustration, the point a little before point B and that a little before point E are the upper writing limit point and lower writing limit point, respectively. The back electrode voltage is set within this range. The voltage should be set close to the upper writing limit point so that the best resolution is obtained.

7.4.2 LIFE TIME AND BACK ELECTRODE VOLTAGE

The back electrode voltage varies as the use time of the oscilloscope increases, as shown with a curve in the illustration.

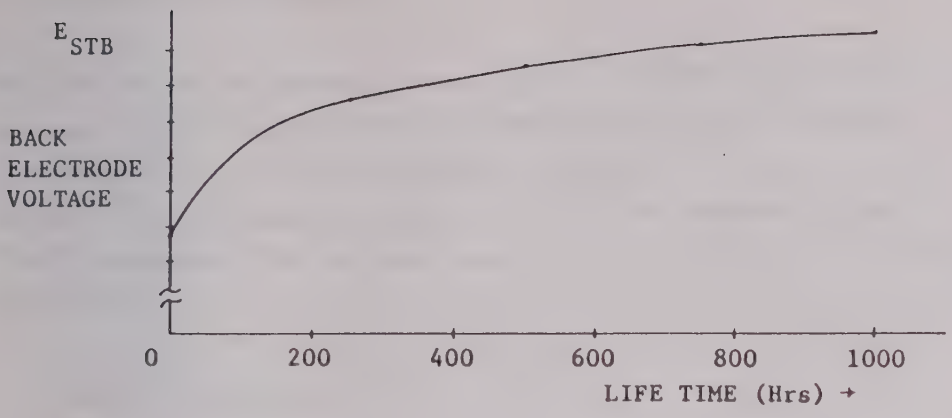

Figure 7-10

From this viewpoint also, it is recommendable to set the back electrode voltage as close to the upper writing limit point as possible.

7.4.3 LIFE TIME AND STORAGE INTENSITY

The storage intensity decreases as the used time of the oscilloscope increases, as a typical curve is shown in the illustration.

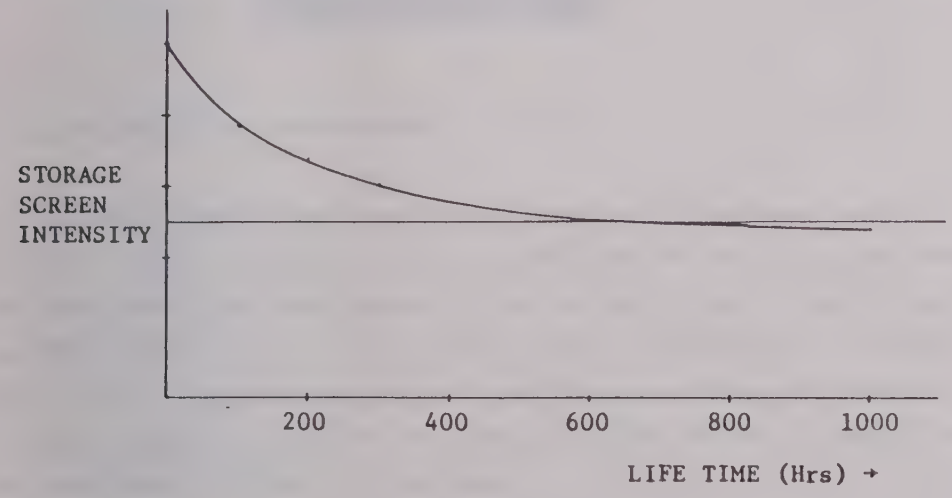

Figure 7-11

7.4.4 MAXIMUM WRITING SPEED

Set the CRT in the storage state, apply a one-shot signal as illustrated and check the writing operation. Checking whether the trace at sections intersecting with the X-X' line are stored or not, vary the signal frequency to find the maximum storage limit frequency. The writing speed (Ws) in this case is calculated as follows:

$$Ws = \pi F A \quad [m/sec]$$

where, F: Limit frequency (Hz)
A: Amplitude of sinusoidal wave displayed (m)

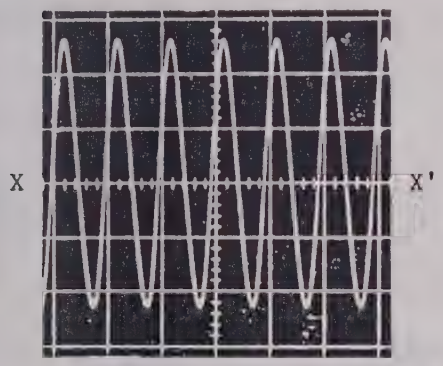

Figure 7-12

7.4.5 WRITING SPEED ENHANCEMENT

At a beam speed higher than the writing limit, no image can be stored. This is because, whatever the beam intensity is increased, writing beam runs away before the potential of the storage target surface which is at the lower stable point reaches the 1st cross-over point. However, on the storage target surface, storage of certain degree is done on the storage target surface in proportion to the density of the writing beam.

Making use of the fact, the writing speed can be enhanced. This is done by shifting temporarily the back electrode potential when the operating range of the phosphor dots of the storage target to which the writing beam is applied is at immediately before 1st crossover point.

The surface voltage of the phosphor dots is shifted at the same time, passes through the 1st crossover point, and settles at the upper stable point so that storage is done. Thus a writing speed higher than the regular maximum writing speed can be attained.

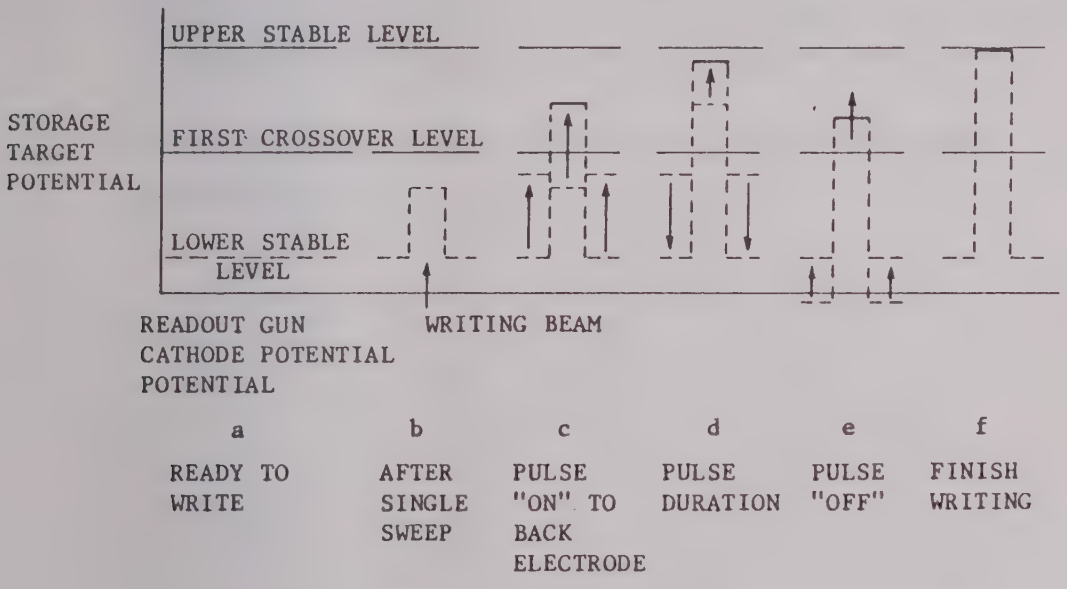

Figure 7-13

a) When in the ready state for writing, the average potential of the storage target surface is slightly higher than the readout gun cathode potential due to partial leak.

b) When in the normal mode of operation, if a single-shot signal whose speed is higher than the writing limit is applied, the surface potential of the storage target surface rises but it does not reach the 1st crossover potential.

c) The storage surface is capacitance-coupled to the back electrode. When an appropriate positive pulse is applied to the back electrode immediately after the above, the potential rise of (b) passes over the 1st crossover voltage.

d) In the pulse duration, the sections of the storage surface which are above and below the 1st crossover point are shifted to the upper and lower stable points, respectively, due to the effect of the readout beam.

e) When the pulse has become off, overall surface becomes negative due to capacitance-coupling. However, the signal input section is at a potential higher than the 1st crossover potential.

f) Due to the effect of the readout beam, the surface assumes writing state.

8. CALIBRATION

8.1 GENERAL

The oscilloscope should be calibrated on overall items at regular intervals. Abbreviated calibration, stressing on a particular item such as sweep time accuracy or vertical sensitivity accuracy pertient for a particular measurement, may be appropriate. However, when the oscilloscope has been used for approximately 6 months or when a component has been replaced for repair, overall items should be calibrated. Overall calibration is required also when a regulated DC power supply voltage, which affects all circuits, has been adjusted.

A simplified calibration procedure is explained in the following.

8.2 CHECK AND CALIBRATION OF DC SUPPLY VOLTAGES

When calibrating the oscilloscope, the DC supply voltages should be checked first of all. For voltage check, use a reliably calibrated digital voltmeter. Voltages and adjustments for the DC supplies are shown in the following table.

DC supply	Type	Voltage range	Adjustment	Note
+5 V	Regulated	+4.75 V to +5.25 V	No adjustment	
+15 V	Regulated	+14.9 V to +15.1 V	VR1403	⊘
-15 V	Regulated	-14.6 V to -15.4 V	No adjustment	
+205 V	Non-regulated	±20%	-	
+300 V	Non-regulated	±20%	-	
+270 V	Regulated	+260 V to +280 V	No adjustment	
-1850 V	Regulated	-1845 V to -1855 V	VR1301	⊘

For voltage check, measure the voltage between each check point and the ground. Each voltage should be checked with an AC line voltage to match the input power selected.

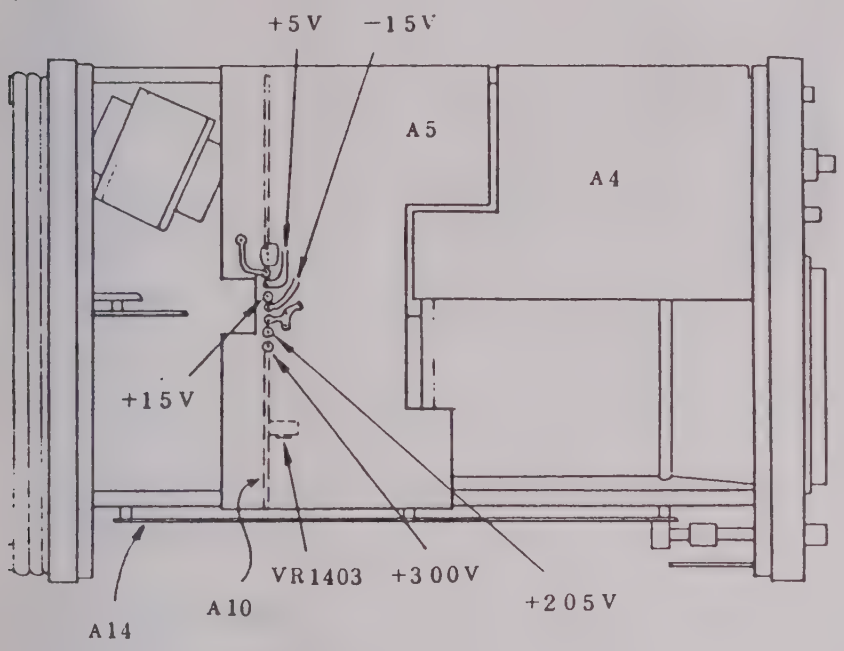

Figure 8-1

The -1850 V supply is for the CRT acceleration voltage. Note that the trace intensity, and vertical and horizontal deflection sensitivities are largely affected if this voltage is varied. Check this voltage between CRT Socket Pin No. 1 and ground.

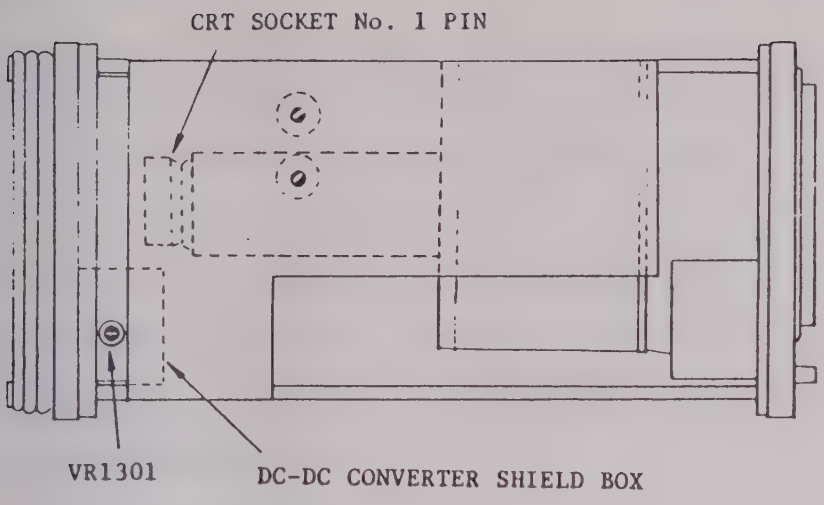

Figure 8-2

Notes: Check and adjust the DC power supply voltages in the following sequence:

1. +5 V supply check
2. +15 V supply adjustment
3. -15 V supply check
4. +205 V check
5. +300 V check
6. +270 V check
7. -1850 V adjustment

For adjusting the -1850 V supply, use a high-input-impedance precision digital voltmeter.

8.3 VERTICAL DEFLECTION SENSITIVITY

Apply to the vertical input terminal a signal of 20 mVp-p and 1 kHz, using a square wave generator of an accuracy of 0.5% or better. So adjust the CAL control (VR305 for CH1 or VR405 for CH2) on the front panel that, with the VOLTS/DIV switch set in the 5 mV position, the signal displayed on the screen becomes 4 DIV accurately. For each position of the VOLTS/DIV switch, apply a signal with an amplitude of 4 times of the VOLTS/DIV indicated value, and check the displayed signal amplitude. The normal indication for all ranges is that the displayed value is within ±3% of the indicated value.

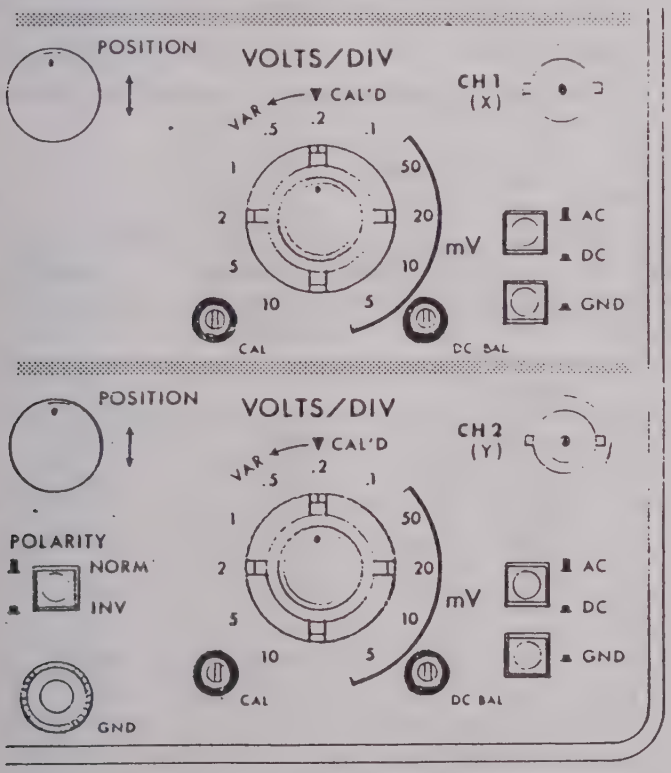

Figure 8-3

8.4 INPUT CAPACITANCES AND PHASE COMPENSATIONS OF VOLTS/DIV RANGES

Unless the phase characteristics at each position of the VOLTS/DIV switch are correctly adjusted, the frequency response may be degraded and the displayed waveforms may be distorted. The phase characteristics can be adjusted by varying the input capacitors and high-frequency compensation capacitors. For this adjustment, a capacitance meter for measurement of the input capacitance (35 pF) and a square wave generator which can provide a quality signal of approximately 1 kHz are required. For input capacitance measurement, bridge-type meters are inadequate. Use a low-capacitance C meter. For the 1 kHz square wave signal, the CALIB signal (for probe calibration) of this instrument can be used. When using a square wave generator, use an instrument which provides waveforms with less sags or overshoots and with a rise time of faster than 1 µsec. The trimmer capacitors for this adjustment are shown in the following table.

VOLTS/DIV switch position	CH1 Trimmer capacitors		CH2 Trimmer capacitors	
	Input capacitor	High frequency compensation capacitor	Input capacitor	High frequency compensation capacitor
5 mV	C114	-	C214	-
10 mV	C109	C108	C209	C208
20 mV	C112	C111	C212	C211
50 mV	C102	C103	C202	C203
0.1 V	-	-	-	-
0.2 V	-	-	-	-
0.5 V	C106	C105	C206	C205
1 V	-	-	-	-
2 V	-	-	-	-
5 V	-	-	-	-
10 V	-	-	-	-

The "-" mark signifies "no adjustment."

Locations of the trimmer capacitors are shown in the following:

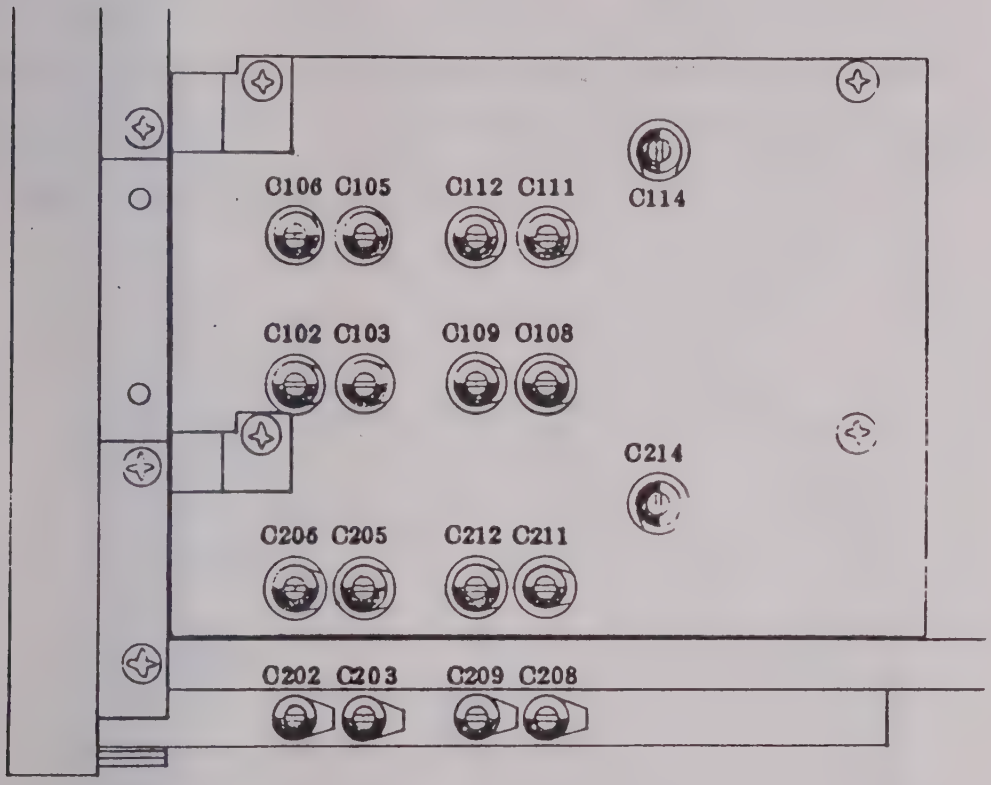

Figure 8-4

8.5 SWEEP TIME

Set the TRIGGER MODE switch and TIME/DIV switch as follows and apply to the vertical input terminal an accurate time marker signal of 1 msec or a 1 kHz signal (preferably a square wave).

TRIGGER MODE: AUTO
TIME/DIV: 1 mS

The sweep time accuracy specification is satisfied if the measured value is within ±3% of the panel indication. The 1 msec/DIV range is used as the reference for other ranges and, therefore this range should be calibrated especially accurately. So adjust the SWEEP CAL ±1 (VR1101) variable resistor that the accuracy becomes better than ±1%. Also, pull up the POSITION knob to the PULL 5 × MAG state and so adjust the MAG ADJ (VR1103) semi-fixed resistor that the accuracy becomes better than ±1%. Locations of the variable resistors are shown in the following illustration.

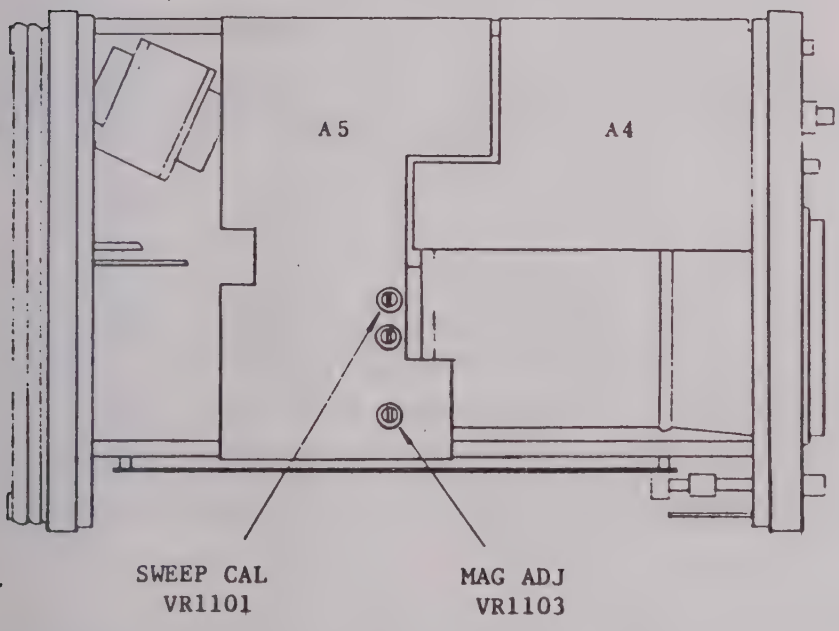

Figure 8-5

8.6 CALIBRATION OF PROBE

To calibrate the probe, use the 1 kHz signal of the calibration voltage terminal (200 mVp-p or 2 Vp-p).

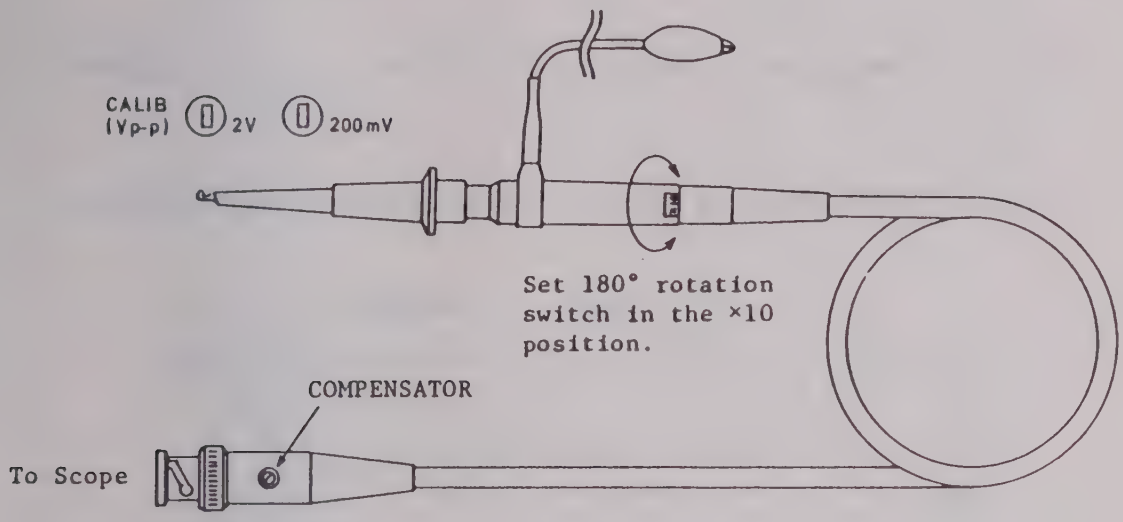

Figure 8-6

Connect the probe to the CH1 or CH2 input terminal and set the range at 50 mV. Touch the 2 Vp-p calibration voltage terminal with the probe tip, and a square wave signal with an amplitude of 4 DIV will be displayed on the screen. So adjust the compensator of the probe with a small screwdriver that a correct waveform is obtained.

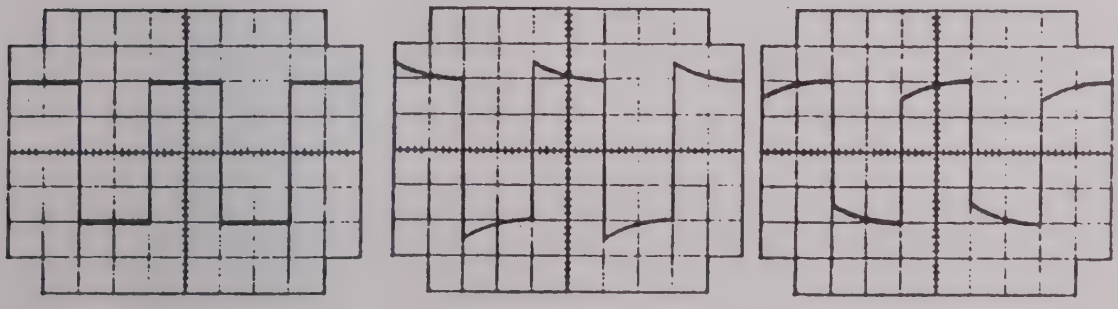

Correct Incorrect Incorrect

Figure 8-7

8.7 ADJUSTMENT OF ASTIGMATISM AND GEOMETRY

ASTIG: So adjust this control, together with the FOCUS control, that the displayed trace or spot becomes sharpest.

GEOMETRY: This control is for correction of barrel and pincushion distortion.

Locations of the controls are shown in the following illustration.

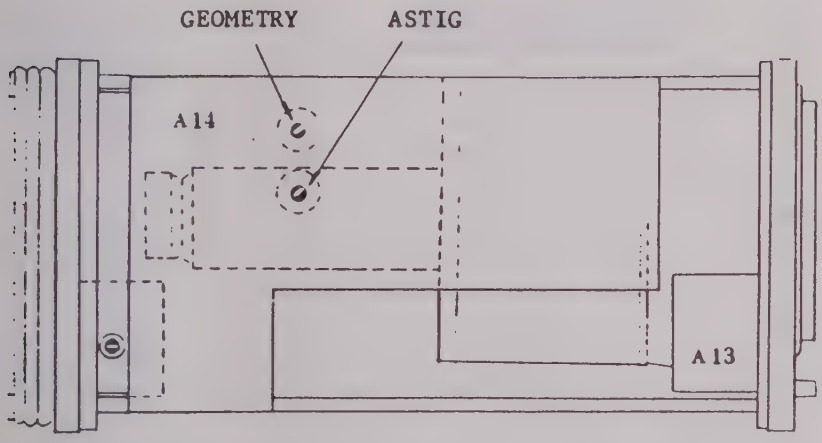

Figure 8-8

8.8 ADJUSTMENT OF BACK ELECTRODE VOLTAGE

This adjustment should be done measuring the hysteresis characteristics of Section 6.4.1. First, set the oscilloscope in the storage state and measure the voltage of PIN No. 14 output terminal (to which a yellow wire is connected) of A-14 printed board using a DC voltmeter or a digital voltmeter. (Note: Measurement can be conveniently done by operating the oscilloscope in the AUTO ERASE mode for 2 - 3 seconds interval.) Adjust the writing beam density (intensity) at an optimal value for 1 mS/DIV sweep.

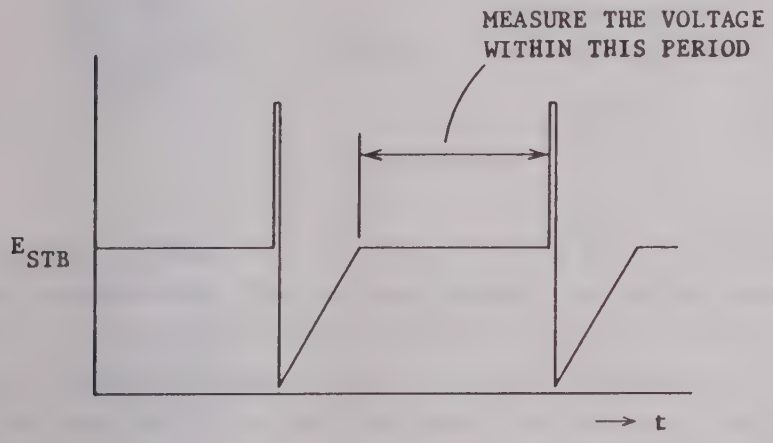

Figure 8-9

Waveform of back electrode voltage when in AUTO ERASE operation

Observing the waveform displayed on the screen, adjust the back electrode voltage setting potentiometer (VR 1605) of A-14 board. As you raise the back electrode voltage (E_{STB}), overall screen becomes bright as if traces had been written on entire screen. The voltage immediately before this bright screen is the upper writing limit voltage.

As you lower the back electrode voltage from the value at which the overall screen has become bright, the screen will become dark starting by the center of the screen. The voltage immediately

before this darkening point is the lower-limit writing voltage. Determine an optimal back electrode voltage measuring both upper and lower writing limit voltages.

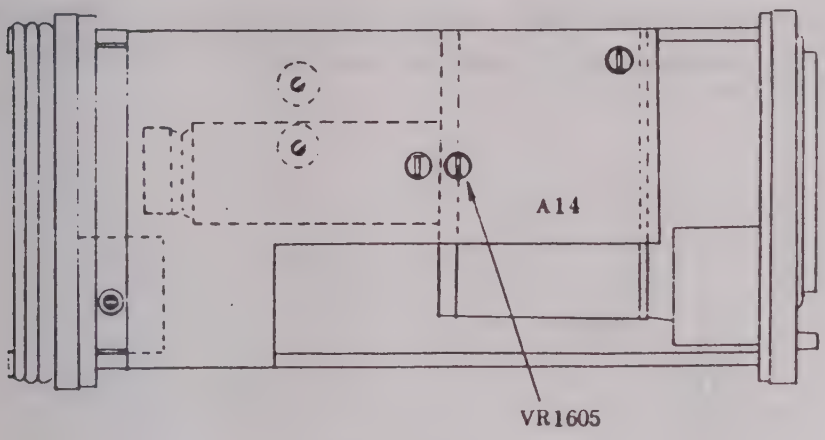

Figure 8-10

An optimal voltage for the back electrode should be selected taking into consideration the contrast between the written section (traces) and the unrecorded section (background) and the life (total used time) of the oscilloscope as explained in Section 6.4.2. Writing can be done so far as the back electrode voltage is between the upper and lower writing limit voltages. From the viewpoint of contrast, a voltage closer to the lower limit writing voltage is advantageous. It is advantageous to set the back electrode voltage at a value close to the upper limit writing voltage for a period of several tens to several hundreds hours and set it in the mid-point or a slightly higher point when the used period has reached several hundreds or thousand hours or over. Only when the contrast is of the prime importance, set the back electrode voltage at a value close to the lower limit writing voltage and adjust the voltage frequently (at every several tens hours).

8.9 TIMER

The instrument includes a timer for counting the total time of the use of the oscilloscope in the storage mode. It does not count the time used as a regular oscilloscope. The count up time is 2000 hours. The location of the timer is shown in the following illustration.

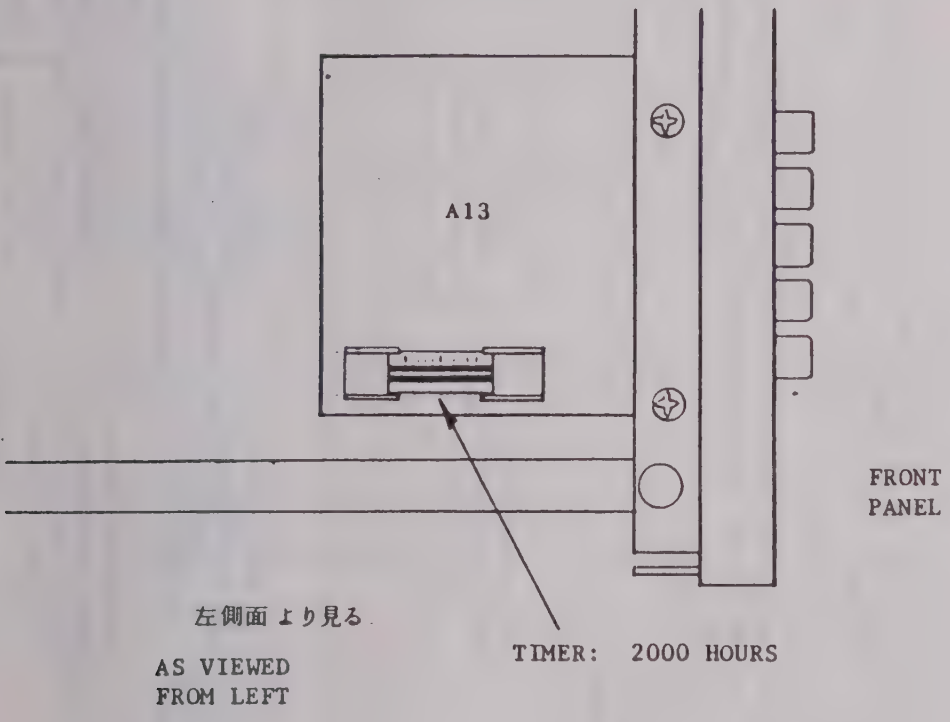

Figure 8-11

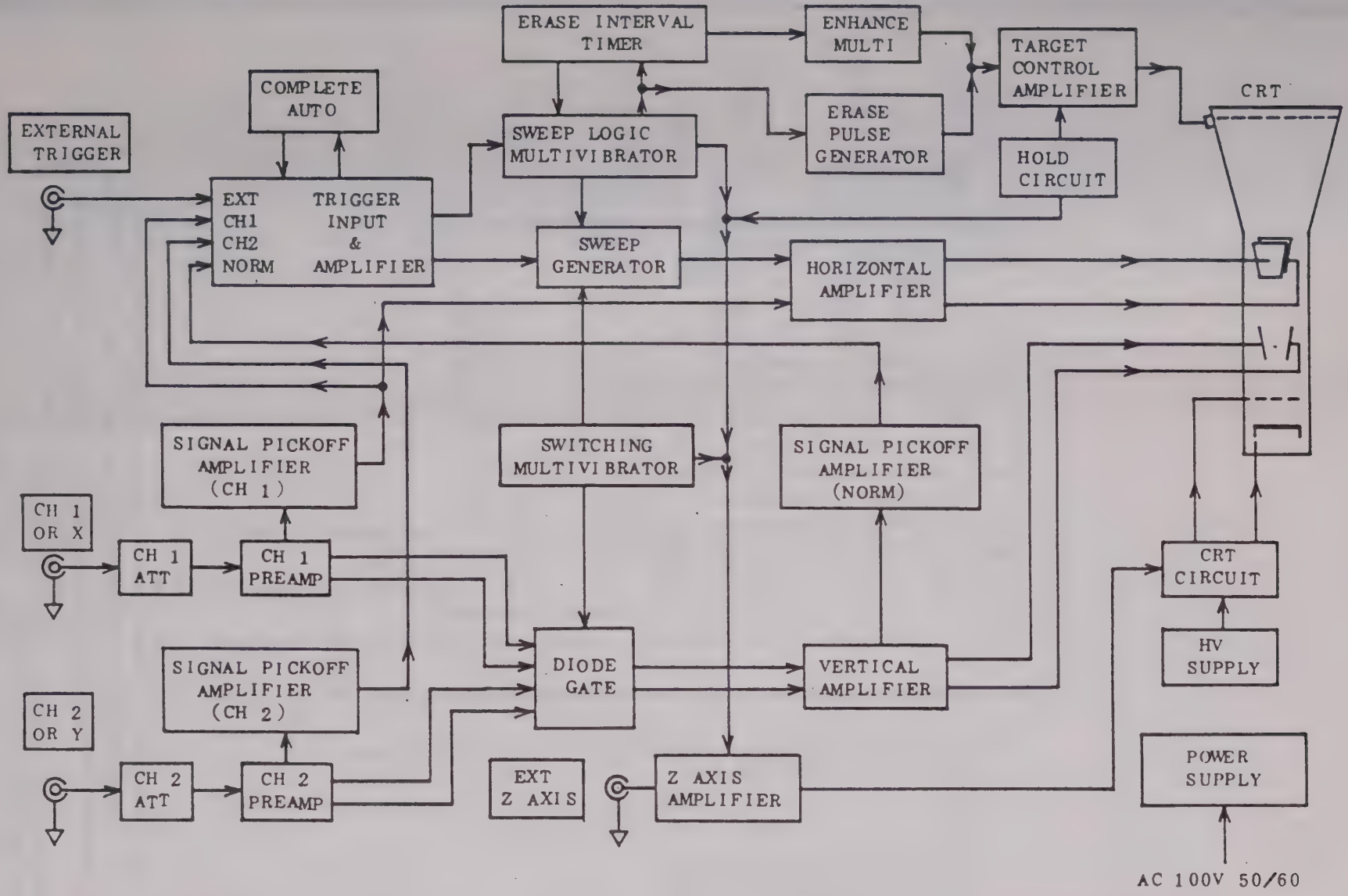

BLOCK BLOCK DIAGRAM

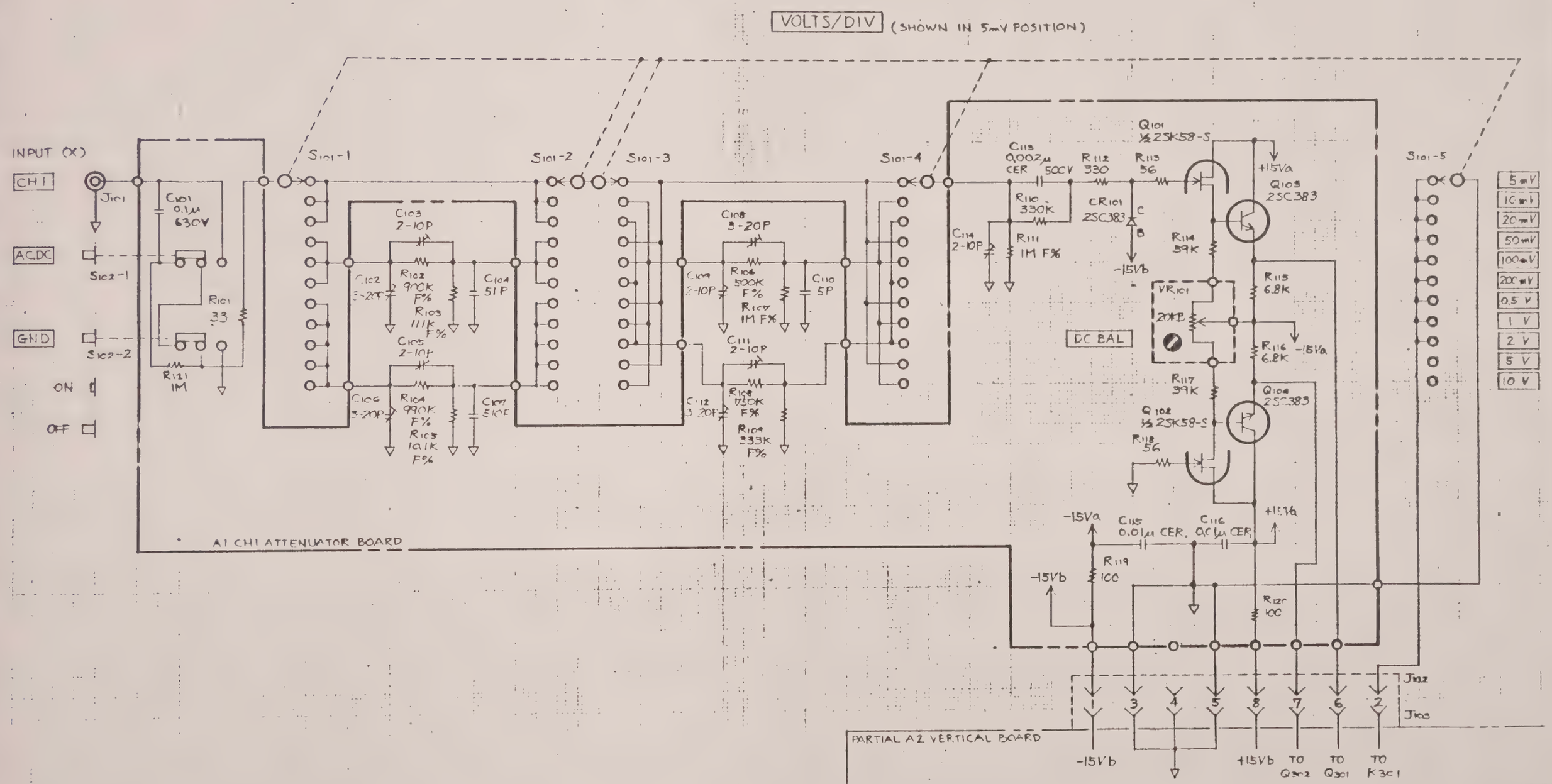

RATING OF FIXED RESISTANCE IS ¼ WATT ±5% ERRORS OTHERWISE NOTED

* AVERAGE VALUE SHOWN ; OPTIMUM VALUE SELECTED AT FACTORY

EXTERNAL SCREWDRIVER ADJUSTMENT

INTERNAL SCREWDRIVER ADJUSTMENT

KIKUSUI ELECTRONICS CORPORATION

TITLE 5316ST OSCILLOSCOPE CH1 VERTICAL INPUT ATTENUATOR

CODE NO

DRAWING NO. 39561B

71042K3K11

DRAWING NO. 39576B

VOLTS/DIV (SHOWN IN 5mV POSITION)

INPUT

CH2

ACDC

GND

ON

OFF

J201

S202-1

S202-2

C201 0.1μ 630V

R201 33

R221 1M

S201-1

S201-2

S201-3

S201-4

S201-5

C203 2-10P

C202 3-20P

R202 900K F%

R203 111K F%

C204 51P

C205 2-10P

C206 3-20P

R204 990K F%

R205 101K F%

C207 510P

C208 3-20P

C209 2-10P

R206 500K F%

R207 1M F%

C210 5P

C211 2-10P

C212 3-20P

R208 1750K F%

R209 333K F%

C213 0.002μ CER 500V

R210 330K

R211 1M F%

C214 2-10P

R212 330

R213 56

CR201 2SC383

Q201 ½2SK58-S

Q202 ½2SK58-S

R214 39K

R217 39K

R218 56

Q203 2SC383

Q204 2SC383

+15Vc

-15Vd

VR201 20KB

DC BAL

R215 6.8K

R216 6.8K

-15Vc

C215 0.01μ CER.

C216 0.1μ CER

R219 100

R220 100

5 mV
10 mV
20 mV
50 mV
100 mV
200 mV
0.5 V
1 V
2 V
5 V
10 V

A1 CH2 ATTENUATOR BOARD

PARTIAL A2 VERTICAL BOARD

J202

J203

3 4 5 8 7 6 2

-15Vd +15Vd TO Q402 TO Q401 TO K401

KIKUSUI ELECTRONICS CORPORATION

TITLE: 5516ST OSCILLOSCOPE
CH2 VERTICAL INPUT
ATTENUATOR

CODE NO.

DRAWING NO. 39576B

71042KSK11

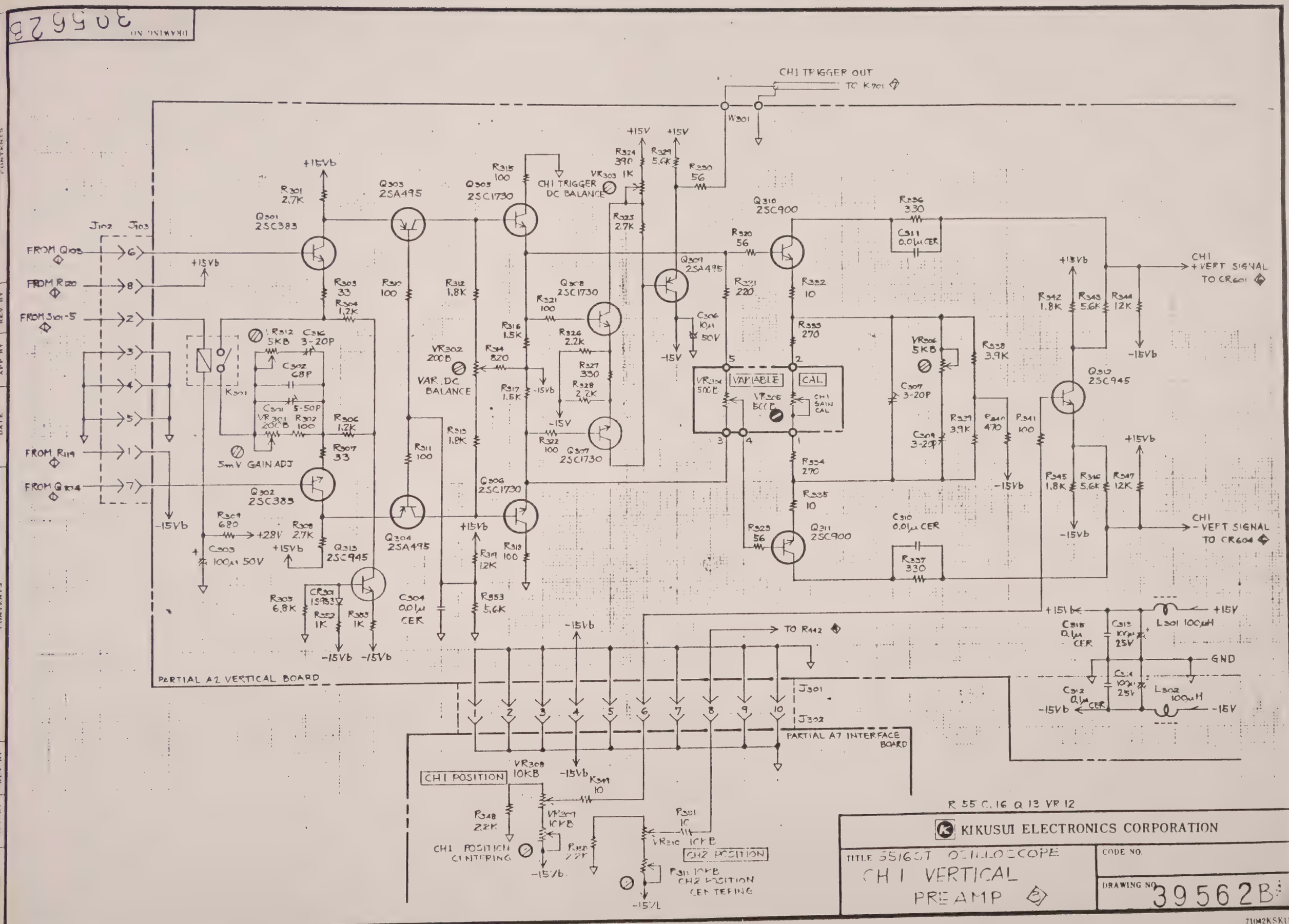

DRAWING NO 39562B
CH1 TRIGGER OUT
TO K701
W301
+15V
R324 390
R329 5.6K
R330 56
VR303 1K
CH1 TRIGGER DC BALANCE
R315 100
Q303 2SA495
Q305 2SC1730
R301 2.7K
Q301 2SC383
J102
J103
FROM Q103
FROM R120
FROM S101-5
FROM R119
FROM Q104
+15Vb
R303 33
R304 1.2K
R310 100
R312 1.8K
R325 2.7K
Q310 2SC900
R336 330
C311 0.01μ CER
R320 56
Q309 2SA495
R331 220
R332 10
Q308 2SC1730
R321 100
R316 1.5K
R326 2.2K
R327 330
R328 2.2K
R322 100
Q307 2SC1730
C306 10μ 50V
-15V
R333 270
VR306 5KB
R338 3.9K
R342 1.8K
R343 5.6K
R344 12K
CH1 +VERT SIGNAL TO CR601
-15Vb
Q312 2SC945
R312 5KB
C316 3-20P
C302 68P
C301 5-50P
VR301 200B
R302 100
R306 1.2K
R307 33
K301
5mV GAIN ADJ
VR302 200B
VAR. DC BALANCE
R314 820
R317 1.5K
R313 1.8K
R311 100
VR304 500B
VARIABLE
CAL
VR305 500B
CH1 GAIN CAL
C307 3-20P
C309 3-20P
R339 3.9K
R340 470
R341 100
R334 270
R335 10
R323 56
Q311 2SC900
C310 0.01μ CER
R337 330
R345 1.8K
R346 5.6K
R347 12K
CH1 -VERT SIGNAL TO CR604
Q302 2SC383
R309 680
+28V
R308 2.7K
C303 100μ 50V
Q313 2SC945
Q304 2SA495
Q306 2SC1730
R319 12K
R318 100
R305 6.8K
CR301 1S933
R352 1K
R353 1K
C304 0.01μ CER
R353 5.6K
TO R442
C315 0.1μ CER
C313 100μ 25V
L301 100μH
GND
C314 100μ 25V
C312 0.1μ CER
L302 100μH
PARTIAL A2 VERTICAL BOARD
J301
J302
PARTIAL A7 INTERFACE BOARD
CH1 POSITION
VR308 10KB
R349 10
R348 2.2K
VR309 10KB
CH1 POSITION CENTERING
R350 2.2K
R351 10
VR310 10KB
CH2 POSITION
R311 10KB
CH2 POSITION CENTERING
R 55 C 16 Q 13 VR 12
KIKUSUI ELECTRONICS CORPORATION
TITLE 5516ST OSCILLOSCOPE
CH 1 VERTICAL PREAMP
CODE NO.
DRAWING NO 39562B
71042KSK11

DRAWING NO 39563B

CONTENTS | DATE | APP BY | REV BY

CH2 TRIGGER OUT
TO 570-4

W401

+15V +15V

+15Vc

R401 2.7K

Q403 2SA495

Q405 2SC1730

R415 100

R425 390

VR403 1KB
CH2 TRIGGER DC BAL

R430 5.6K

R431 56

P426 2.7K

Q401 2SC383

Q410 2SC900

R438 330

C410 0.01μ CER

R421 56

CH2 +VERT SIGNAL TO CR605

FROM Q203

FROM R220

FROM 3201-5

FROM R219

FROM Q204

J202, J203

+15Vc

R403 33

R410 100

R412 1.8K

VR409 5KB

C416 3-20P

R404 1.2K

K401

VAR. DC BALANCE
VR402 200B

C402 33P

C401 5-50P

R406 1.2K

R402 100

R407 33

VR401 200B
CH2 5mV GAIN ADJ

Q402 2SC383

R411 100

R413 1.8K

Q408 2SC1730

R422 100

R416 1.5K

P427 2.2K

R414 820

R428 330

R429 2.2K

R417 1.5K

-15V

R423 100

Q407 2SC1730

Q406 2SC1730

Q409 2SA495

C406 10μ 50V

-15V

R432 220

R439 10

R434 270

R424 56

Q411 2SC900

C411 0.01μ CER

R437 10

R439 330

POLARITY
NORM
INV
C401

VR404 500B
VARIABLE

CAL

VR405 500B
CH2 GAIN CAL

R436 270

VR406 5KB

C407 3-20P

C409 3-20P

R440 3.9K

R441 3.9K

VR407 1KB

-15Vc

Q412 2SC945

+15V

R443 1.8K

R445 5.6K

R447 12K

-15V

R442 100

R444 1.8K

R446 5.6K

R448 12K

CH2 -VERT SIGNAL TO CR608

FROM R351

R408 2.7K

Q404 2SA495

Q415 2SC945

R418 100

R419 12K

R420 5.6K

C404 0.01μ CER

R409 680

+28V

C403 100μ 50V

CP401 15953

R405 6.8K

R449 1K

R450 1K

-15Vc -15Vc

+15Vc

C412 0.1μ CER

C414 100μ 25V

L401 100μH

+15V

GND

C413 0.1μ CER

C415 100μ 25V

L402 100μH

-15Vc

-15V

PARTIAL A2 VERTICAL BOARD

KIKUSUI ELECTRONICS CORPORATION

TITLE 551GST OSCILLOSCOPE
CH2 VERTICAL
PREAMP (4)

CODE NO.

DRAWING NO. 39563B

7104 KSK11

DRAWING NO 395648

CONTENTS | DATE | APP BY | REV BY

PARTIAL A2 VERTICAL BOARD

MODE (SHOWN IN CH1 POSITION)

CH1 S501-1

DUAL

CH2 S501-2

ADD S501-3

XY S501-4

TO CR1602 ⑥

CR501 1S953 | CR502 1S953 | CR503 1S953 | CR504 1S953

+5V

R501 5.6K | U501-1 1/4 SN7400N | R502 3.3K | C502 330P | C503 330P | R503 3.3K | U501-2 1/4SN7400N

R504 100 | U501-3 1/4SN7400N | C505 0.0022μ | R505 5.6K | U501-4 1/4SN7400N | C504 0.01μ CER

C501 0.01μ CER

C506 51P | C507 51P

CR505 1S953 | CR506 1S953

R506 3.3K | U502-4 SN7400N | U502-1 1/4SN7400N | R508 1K

CH1 SWITCHING SIGNAL TO CR602 ⑥

U502-3 SN7400N | U502-2 1/4SN7400N | R509 1K

CH2 SWITCHING SIGNAL TO CR606 ⑥

R507 3.3K

C514 0.01μ CER | C515 0.01μ CER | C516 0.01μ CER | C517 0.01μ CER | C518 100μ 10V | GND

+28V

+15V

TO VR601 ⑥ (ADD)

R510 330

C508 47μ 50V | C509 47μ 50V

H501

U503-3 1/4SN7400N | R511 100 | C510 0.0022μ | U503-1 1/4SN7400N | U503-2 1/4SN7400N

R523 150 | POWER | CR1401

R522 5G

TO R1203 ⑫ BLANKING SIGNAL

W502

C511 100P

R516 470 | VR501 500B | R514 330 | U504-1 1/4SN7400N | R515 220 | U504-2 1/4SN7400N | R517 330 | C512 1μ 50V

U504-4 1/4SN7400N | CR507 1S953 | R518 10K | C513 100P | CR508 1S953 | VR502 10K

R519 3.6K | R520 403 FX

J503 | J504

CALIB
2V
200 mV
VP-P

J501 | J502

PARTIAL A7 INTERFACE BOARD

R521 68 1/2W | C511 10μ 50V

S401-1

0.5S | CHOP | 1mS | 0.5mS | ALT | 0.2mS

TIME/DIV

FROM K1101 ALT SIGNAL ⑪

J702 | J802 | J701 | J801

TO K701 ⑰ | TO K702 ⑰ | TO K1101 ⑪

PARTIAL A6 TRIGGER BOARD

PARTIAL A5 HORIZONTAL AMP BOARD

R.21 C.19 Q.1 CR.8 VR.2 J.4 U.4

KIKUSUI ELECTRONICS CORPORATION

TITLE 55 GST OSCILLOSCOPE VERTICAL SWITCHING CIRCUIT ⑤

CODE NO.

DRAWING NO 395643

71042KSK11

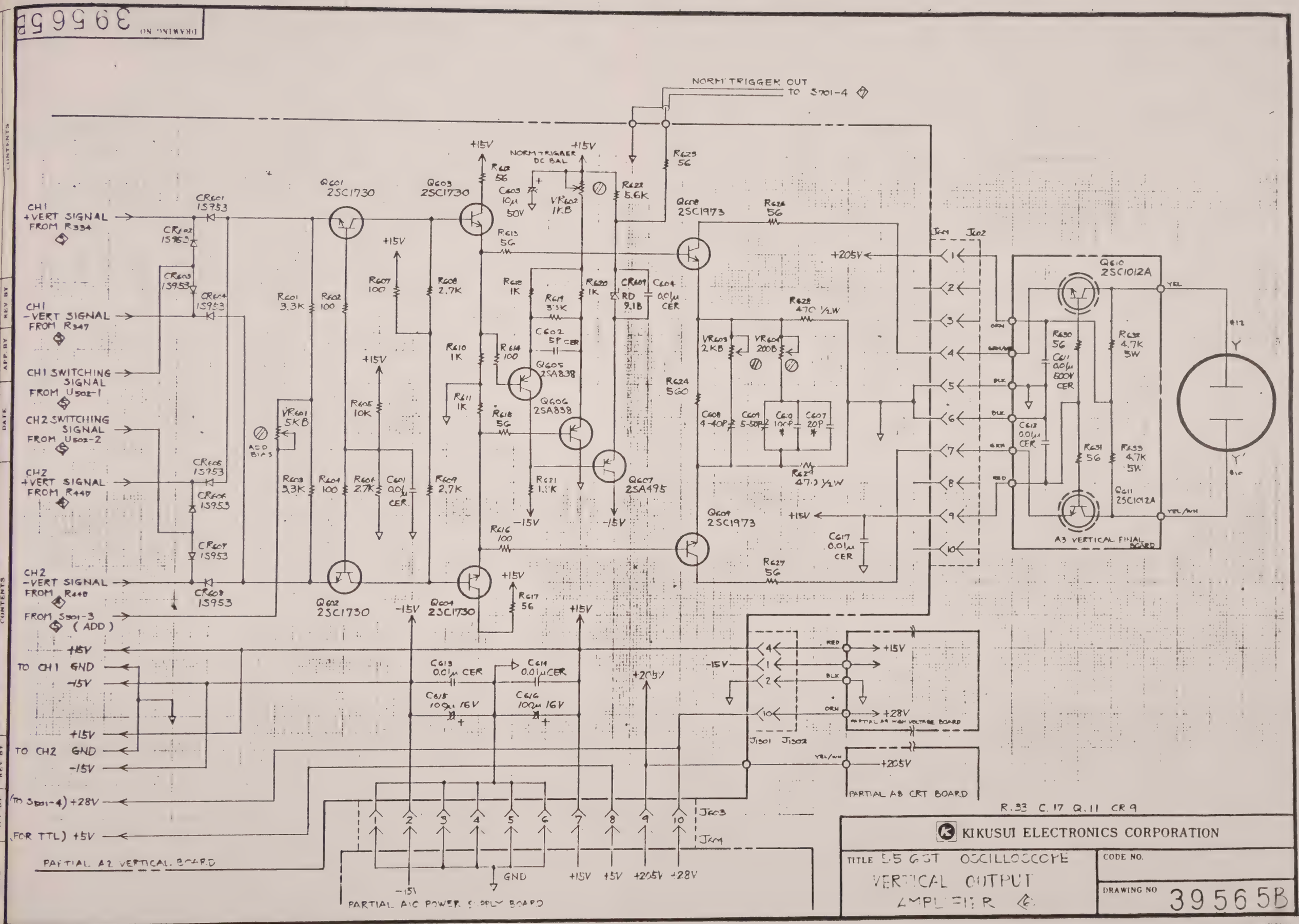
DRAWING NO 39565B
NORM TRIGGER OUT TO S701-4
CH1 +VERT SIGNAL FROM R334
CH1 -VERT SIGNAL FROM R347
CH1 SWITCHING SIGNAL FROM U502-1
CH2 SWITCHING SIGNAL FROM U502-2
CH2 +VERT SIGNAL FROM R447
CH2 -VERT SIGNAL FROM R448
FROM S501-3 (ADD)
TO CH1 GND
TO CH2 GND
(TO S501-4) +28V
(FOR TTL) +5V
PARTIAL A2 VERTICAL BOARD
PARTIAL A10 POWER SUPPLY BOARD
PARTIAL A8 CRT BOARD
PARTIAL A9 HIGH VOLTAGE BOARD
A3 VERTICAL FINAL BOARD
NORM TRIGGER DC BAL
Q601 2SC1730
Q602 2SC1730
Q603 2SC1730
Q604 2SC1730
Q605 2SA838
Q606 2SA838
Q607 2SA495
Q608 2SC1973
Q609 2SC1973
Q610 2SC1012A
Q611 2SC1012A
CR601 1S953
CR602 1S953
CR603 1S953
CR604 1S953
CR605 1S953
CR606 1S953
CR607 1S953
CR608 1S953
CR609 RD 9.1B
VR601 5KB
VR602 1KB
VR603 2KB
VR604 200B
ADD BIAS
R601 3.3K
R602 100
R603 3.3K
R604 100
R605 10K
R606 2.7K
R607 100
R608 2.7K
R609 2.7K
R610 1K
R611 1K
R612 56
R613 56
R614 100
R615 56
R616 100
R617 56
R618 1K
R619 3.3K
R620 1K
R621 1.5K
R622 5.6K
R623 56
R624 560
R626 56
R627 56
R628 470 1/2W
R629 470 1/2W
R630 56
R631 56
R632 4.7K 5W
R633 4.7K 5W
C601 0.01μ CER
C602 5P CER
C603 10μ 50V
C604 0.01μ CER
C607 20P
C608 4-40P
C609 5-50P
C610 100P
C611 0.01μ 500V CER
C612 0.01μ CER
C613 0.01μ CER
C614 0.01μ CER
C615 100μ 16V
C616 100μ 16V
C617 0.01μ CER
+15V
-15V
+205V
+28V
+5V
GND
J601
J602
J603
J604
J1501
J1502
YEL
YEL/WH
RED
BLK
ORN
Y
Y'
R.33 C.17 Q.11 CR9
KIKUSUI ELECTRONICS CORPORATION
TITLE 5.5 GST OSCILLOSCOPE VERTICAL OUTPUT AMPLIFIER
CODE NO.
DRAWING NO 39565B
71042KSK11

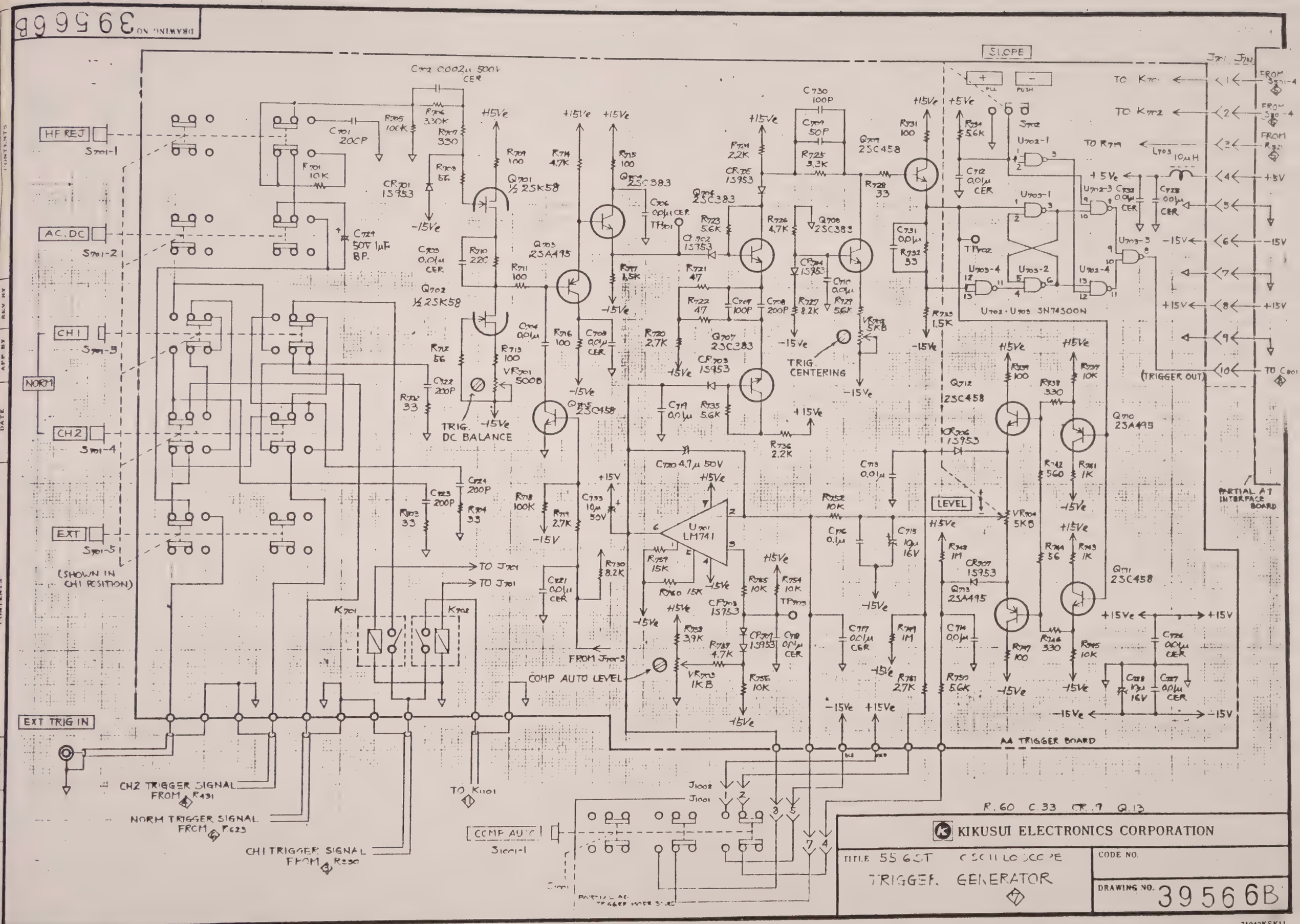
DRAWING NO 39566B
SLOPE
HF REJ
AC.DC
CH1
NORM
CH2
EXT
(SHOWN IN CH1 POSITION)
EXT TRIG IN
CH2 TRIGGER SIGNAL FROM R431
NORM TRIGGER SIGNAL FROM R623
CH1 TRIGGER SIGNAL FROM R330
TO K1101
COMP AUTO
TRIG. DC BALANCE
TRIG. CENTERING
COMP AUTO LEVEL
LEVEL
U702 · U703 SN74S00N
U701 LM741
A4 TRIGGER BOARD
PARTIAL A7 INTERFACE BOARD
(TRIGGER OUT)
TO K701
TO K702
TO R719
TO C801
FROM S501-4
FROM S501-4
FROM R321
R.60 C.33 CR.9 Q.13
KIKUSUI ELECTRONICS CORPORATION
TITLE 55 6ST OSCILLOSCOPE
TRIGGER GENERATOR
CODE NO.
DRAWING NO. 39566B
71042KSK11

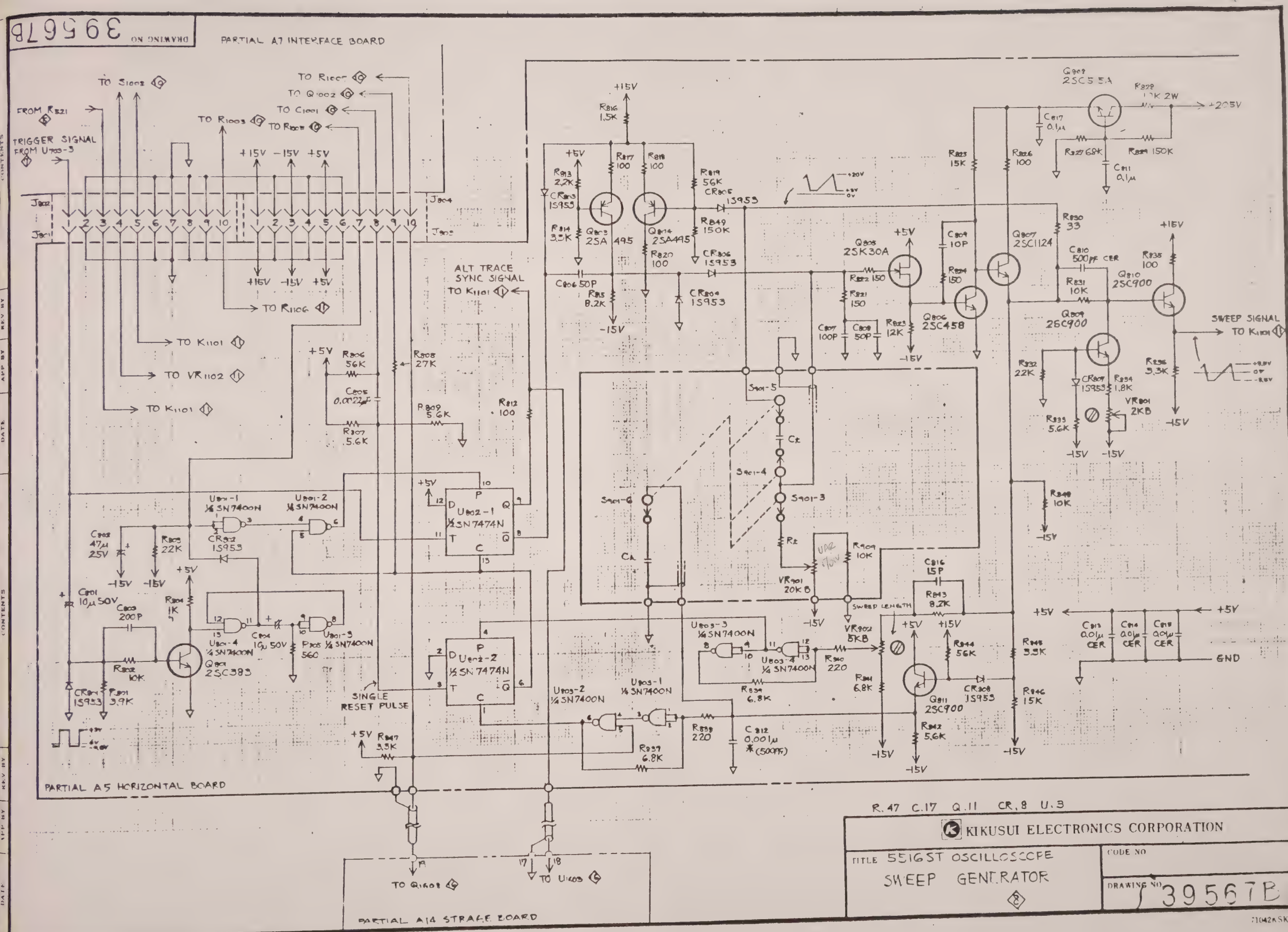
DRAWING NO 39567B
PARTIAL A7 INTERFACE BOARD
TO S1002
TO R1007
TO Q1002
TO C1001
TO R1003
TO R1005
FROM R521
TRIGGER SIGNAL FROM U703-3
+15V -15V +5V
J802
J801
J804
J803
TO R1106
TO K1101
TO VR1102
TO K1101
ALT TRACE SYNC SIGNAL TO K1101
R806 56K
R808 27K
C805 0.0022μF
R807 5.6K
R809 5.6K
R812 100
U801-1 ¼ SN7400N
U801-2 ¼ SN7400N
CR802 1S953
C802 47μ 25V
R803 22K
C801 10μ 50V
C803 200P
R804 1K
U801-4 ¼ SN7400N
C804 10μ 50V
U801-3 ¼ SN7400N
R805 560
Q801 2SC383
R802 10K
CR801 1S953
R801 3.9K
U802-1 ½ SN7474N
U802-2 ½ SN7474N
SINGLE RESET PULSE
R847 3.3K
PARTIAL A5 HORIZONTAL BOARD
TO Q1608
TO U1603
PARTIAL A14 STRAGE BOARD
R816 1.5K
R813 2.2K
CR803 1S953
R814 3.3K
Q803 2SA495
R817 100
R818 100
Q804 2SA495
R819 56K
CR805 1S953
R849 150K
R820 100
CR806 1S953
C806 50P
R815 8.2K
CR804 1S953
Q805 2SK30A
R822 150
R821 150
C807 100P
C808 50P
R823 12K
Q806 2SC458
C809 10P
R824 150
Q807 2SC1124
R825 15K
R826 100
Q808 2SC515A
R828 10K 2W
+205V
C817 0.1μ
R827 68K
R829 150K
C811 0.1μ
R830 33
C810 500pF CER
R831 10K
Q810 2SC900
Q809 2SC900
R835 100
SWEEP SIGNAL TO K1101
R832 22K
CR807 1S953
R834 1.8K
VR801 2KB
R833 5.6K
R836 3.3K
R848 10K
S901-5
S901-4
S901-3
S901-6
Ct
Rt
VR901 20KB
R909 10K
SWEEP LENGTH
VR902 5KB
C816 15P
R843 8.2K
U803-3 ¼ SN7400N
U803-4 ¼ SN7400N
R840 220
R839 6.8K
R841 6.8K
R844 56K
Q811 2SC900
CR808 1S953
R842 5.6K
R845 3.3K
R846 15K
C813 0.01μ CER
C814 0.01μ CER
C815 0.01μ CER
GND
U803-2 ¼ SN7400N
U803-1 ¼ SN7400N
R838 220
C812 0.001μ *(500PF)
R837 6.8K
R.47 C.17 Q.11 CR.8 U.3
KIKUSUI ELECTRONICS CORPORATION
TITLE 5516ST OSCILLOSCOPE SWEEP GENERATOR
CODE NO
DRAWING NO 39567B
71042KSK11

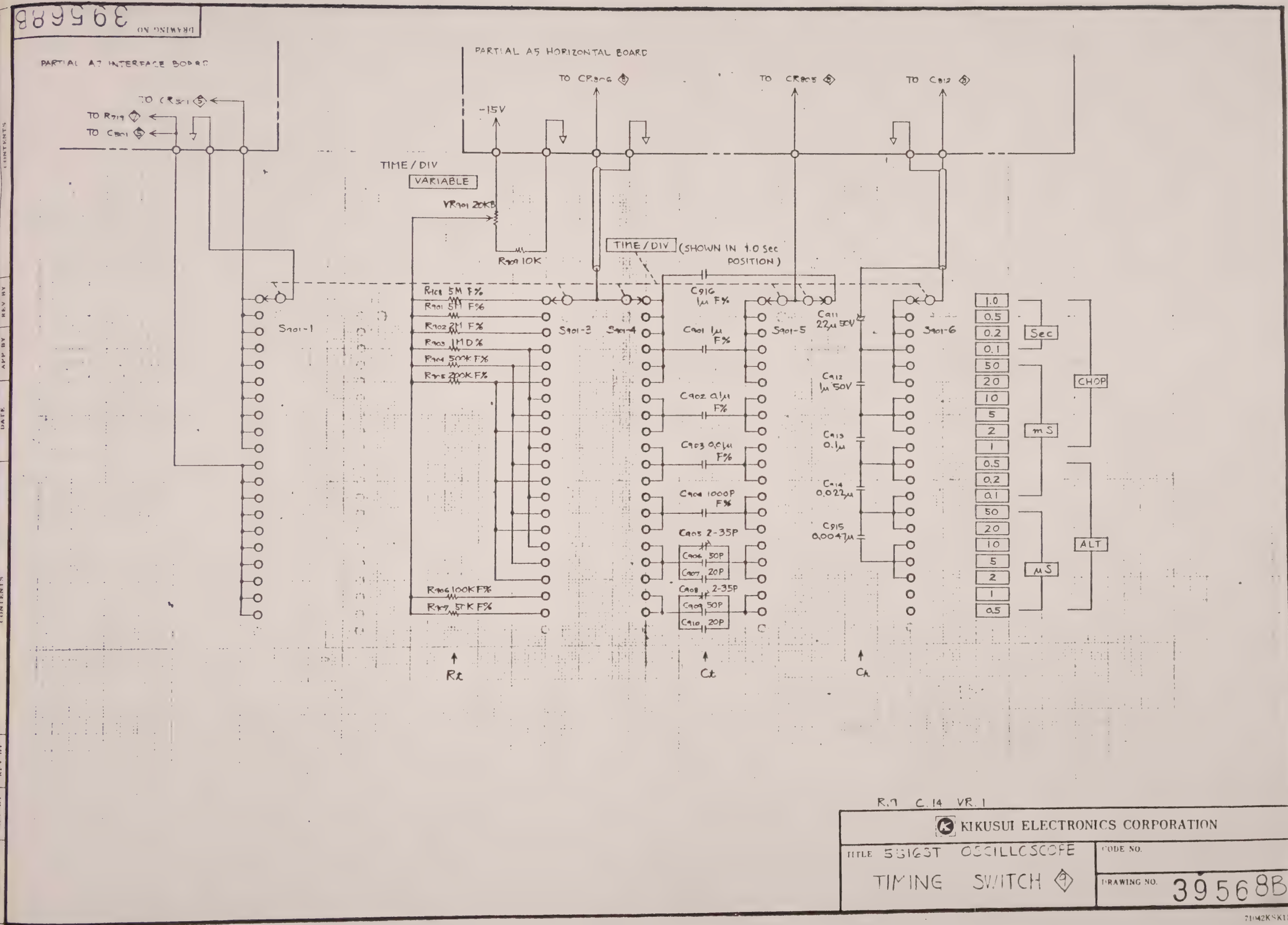
DRAWING NO 39568B
PARTIAL A7 INTERFACE BOARD
TO CR501 5
TO R719 7
TO C801 5
PARTIAL A5 HORIZONTAL BOARD
TO CR806 8
TO CR805 8
TO C812 8
-15V
TIME / DIV
VARIABLE
VR901 20KB
R909 10K
TIME / DIV (SHOWN IN 1.0 Sec POSITION)
R908 5M F%
R901 5M F%
R902 2M F%
R903 1MD%
R904 500K F%
R905 200K F%
R906 100K F%
R907 50K F%
S901-1
S901-3
S901-4
S901-5
S901-6
C916 1μ F%
C901 1μ F%
C902 0.1μ F%
C903 0.01μ F%
C904 1000P F%
C905 2-35P
C906 50P
C907 20P
C908 2-35P
C909 50P
C910 20P
C911 22μ 50V
C912 1μ 50V
C913 0.1μ
C914 0.022μ
C915 0.0047μ
1.0
0.5
0.2
0.1
50
20
10
5
2
1
0.5
0.2
0.1
50
20
10
5
2
1
0.5
Sec
mS
μS
CHOP
ALT
Rt
Ct
Ch
R.7 C.14 VR.1
KIKUSUI ELECTRONICS CORPORATION
TITLE 5S163T OSCILLOSCOPE
TIMING SWITCH 9
CODE NO.
DRAWING NO. 39568B
71042KSK11

DRAWING NO 39569B

PARTIAL A5 HORIZONTAL BOARD

PARTIAL A4 TRIGGER BOARD

TRIGGER MODE (SHOWN IN COMP AUTO POSITION)

COMP AUTO — S1001-1

AUTO — S1001-2

NORM — S1001-3

SINGLE — S1001-4

PUSH TO RESET

READY — CR1001 TLR-105

A6 TRIGGER MODE BOARD

PARTIAL A1A STORAGE BOARD

TO CR1601

TO R750 — −15Ve

TO R751 — +15Ve

TO R752

TO R753

TO R710

TO K702

TO K701

TO U703-3

TO C801

TO K1101

TO VR1102

TO K1101

TO R1106

TO R347

TO R305

TO R306

TO R309

+5V −15V +15V

15V −15V +5V

J701 J702 J703 J704

J1001 J1002 J1003 J1004

J801 J802 J803 J804

J501 J502 J503 J504

J301 J302 J303 J304

POSITION — VR1001 20K — R1002 10

PULL — PUSH — S1002

5×MAG

R1003 6.8K

R1006 10

R1007 10

R1008 150

C1001 0.1μ CER

Q1001 2SA495

R1004 10K

Q1002 2SC945

R52 68

ALT

CHOP

PARTIAL A7 INTERFACE BOARD

FROM R344

FROM R351

−15Vb

TO CR801

TO C801

TO S501-4

FROM S501-4

TO R442

TO R341

PARTIAL A2 VERTICAL BOARD

S901 — S901-1 — TIME/DIV

15

CHOP — 1mS — 0.5mS

ALT — 0.5μS

R. 8 C. 1 Q. 2 CR. 1 VR. 1

KIKUSUI ELECTRONICS CORPORATION

TITLE 5516ST OSCILLOSCOPE
TRIGGER MODE & INTERFACE BOARD

CODE NO.

DRAWING NO. 39569B

1042KSK11

CONTENTS | REV HY | APP BY | DATE | DRAWN | CHK'D | APP'D | DATE

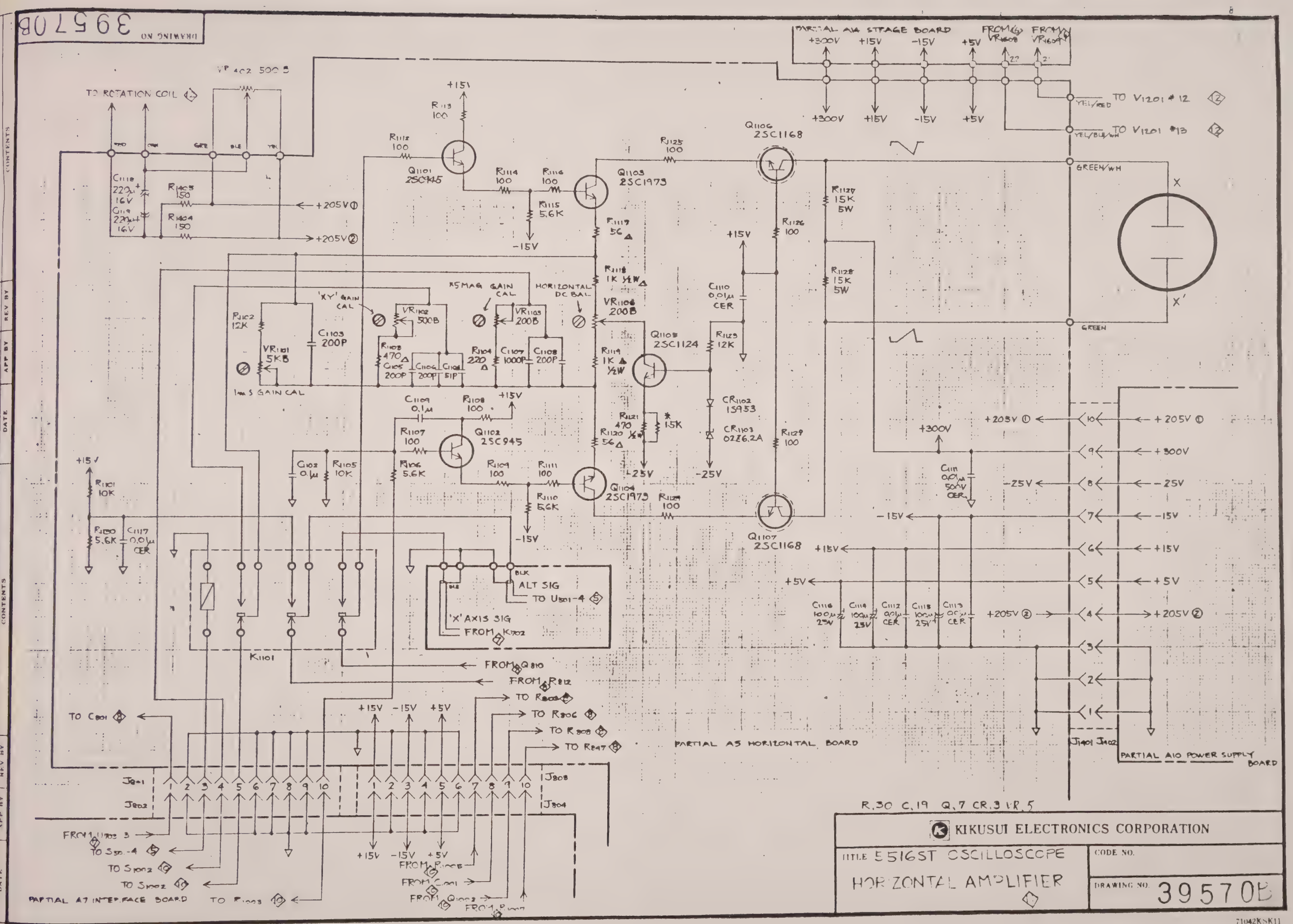

DRAWING NO 39570B
PARTIAL A14 STRAGE BOARD
+300V +15V -15V +5V
FROM VR1608
FROM VR1609
TO V1201 #12
TO V1201 #13
YEL/RED
YEL/BLE/WH
GREEN/WH
GREEN
TO ROTATION COIL
VR402 500B
+205V ①
+205V ②
Q1101 2SC945
Q1102 2SC945
Q1103 2SC1973
Q1104 2SC1973
Q1105 2SC1124
Q1106 2SC1168
Q1107 2SC1168
'XY' GAIN CAL
X5MAG GAIN CAL
HORIZONTAL DC BAL
1mS GAIN CAL
VR1101 5KB
VR1102 500B
VR1103 200B
VR1106 200B
CR1102 1S953
CR1103 02Z6.2A
K1101
ALT SIG
TO U501-4
'X' AXIS SIG
FROM K1702
FROM Q810
FROM R812
TO R803
TO R806
TO R808
TO R847
TO C801
PARTIAL A5 HORIZONTAL BOARD
PARTIAL A10 POWER SUPPLY BOARD
J1401 J1402
J801
J802
J803
J804
FROM U703 3
TO S501-4
TO S1002
TO S1002
PARTIAL A7 INTERFACE BOARD
TO R1003
FROM R1005
FROM C1001
FROM Q1002
FROM R1007
R.30 C.19 Q.7 CR.3 VR.5
KIKUSUI ELECTRONICS CORPORATION
TITLE 5516ST OSCILLOSCOPE
HORIZONTAL AMPLIFIER
CODE NO.
DRAWING NO. 39570B
71042KSK11

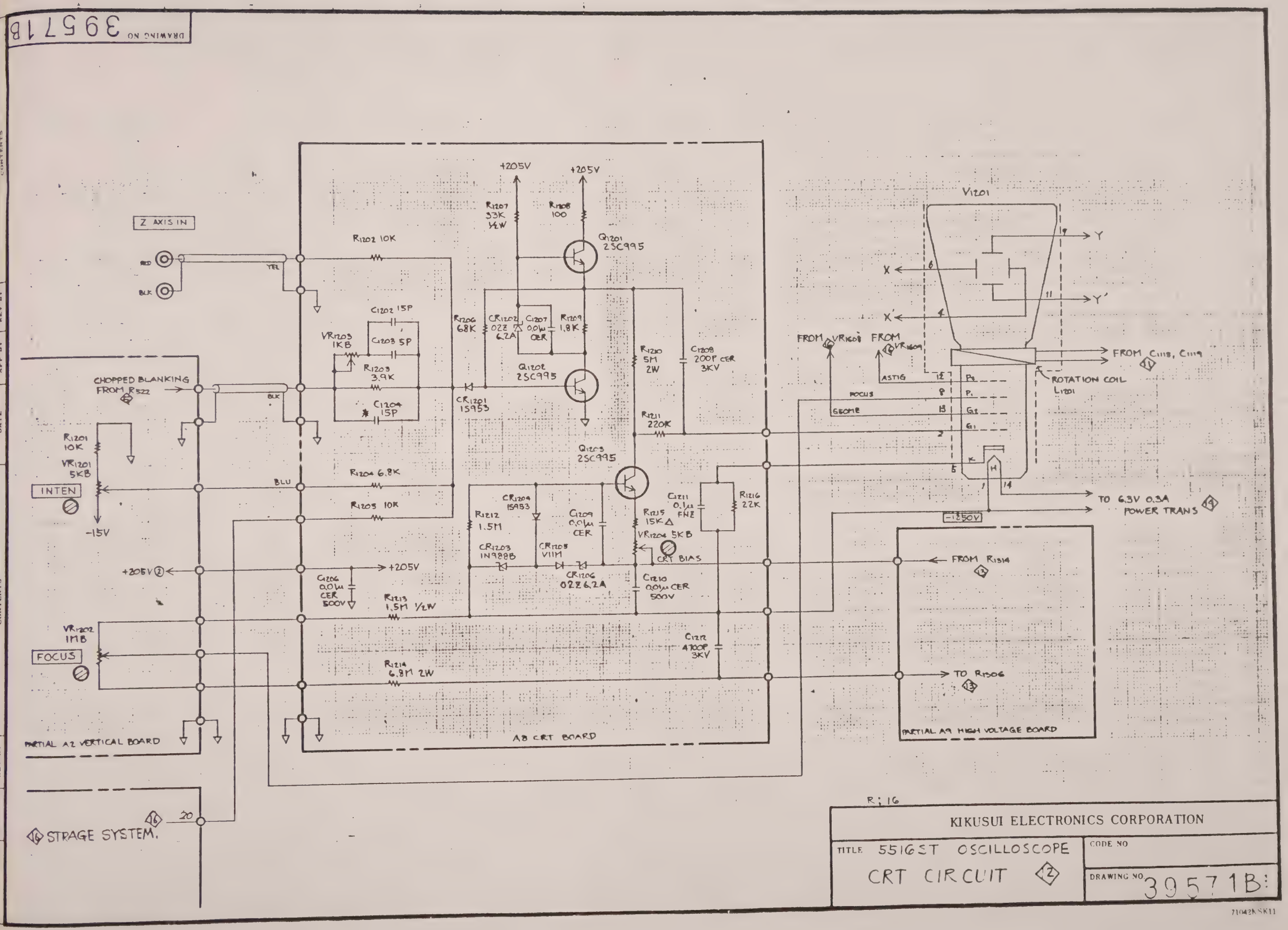
DRAWING NO 39571B
Z AXIS IN
RED
BLK
YEL
BLU
CHOPPED BLANKING FROM R522
R1201 10K
VR1201 5KB
INTEN
-15V
+205V
R1202 10K
C1202 15P
C1203 5P
VR1203 1KB
R1203 3.9K
C1204 15P
R1204 6.8K
R1205 10K
C1206 0.01μ CER 500V
R1213 1.5M 1/2W
VR1202 1MB
FOCUS
R1214 6.8M 2W
PARTIAL A2 VERTICAL BOARD
STRAGE SYSTEM.
20
R1207 33K 1/2W
R1208 100
Q1201 2SC995
R1206 68K
CR1202 02Z 6.2A
C1207 0.01μ CER
R1209 1.8K
Q1202 2SC995
CR1201 1S953
R1210 5M 2W
C1208 200P CER 3KV
R1211 220K
Q1203 2SC995
CR1204 1S953
R1212 1.5M
C1209 0.01μ CER
CR1203 1N988B
CR1205 V11M
CR1206 02Z6.2A
R1215 15K
VR1204 5KB
CRT BIAS
C1211 0.1μ FNZ
R1216 22K
C1210 0.01μ CER 500V
C1212 4700P 3KV
A8 CRT BOARD
V1201
X
X'
Y
Y'
FROM VR1608
FROM VR1609
ASTIG
FOCUS
GEOME
FROM C1118, C1119
ROTATION COIL L1201
TO 6.3V 0.3A POWER TRANS
-1250V
FROM R1314
TO R1306
PARTIAL A9 HIGH VOLTAGE BOARD
R; 16
KIKUSUI ELECTRONICS CORPORATION
TITLE 5516ST OSCILLOSCOPE
CRT CIRCUIT
CODE NO
DRAWING NO. 39571B
71042KSK11

DRAWING NO 39572B

CONTENTS | DATE | APP BY | REV BY

+28V
+15V
-15V
10
9
8
7
6
5
4
3
2
1
ORN
RED
BLK
BLU
BLK
J1301 J1302
PARTIAL A2 VERTICAL BOARD
C1301 0.01μ CER
R1301 56K
R1310 8.2K
C1302 0.01μ CER
C1303 47μ 50V
Q1302 2SA495
R1311 100
R1302 10K
C1304 0.1μ FNZ
YEL
GRN
BLK
Q1303 2SD381
R1303 100
VR1301 20KB
R1308 6.8K Δ
-1850V ADJ
R1312 10
R1313 10
Q1301 2SC900
R1306 100
R1309 1K
C1305 0.1μ
R1305 560
R1304 15K
CR1301 1S953
A9 HIGH VOLTAGE BOARD
RED
C1310A 4700P 3KV
CR1302 ESJA35-12
R1314 33K
CR1305 ESJA35-12
C1306 4700P 3KV
C1307 4700P 3KV
CR1303 V11M
CR1304 V11M
GRN
TO CR1206 A2
GRN/WH
FROM R1217 A2

R;14 C;7

KIKUSUI ELECTRONICS CORPORATION

TITLE 5516S OSCILLOSCOPE
HIGH VOLTAGE GENERATOR A3

CODE NO.

DRAWING NO 39572B

71042K-SK11

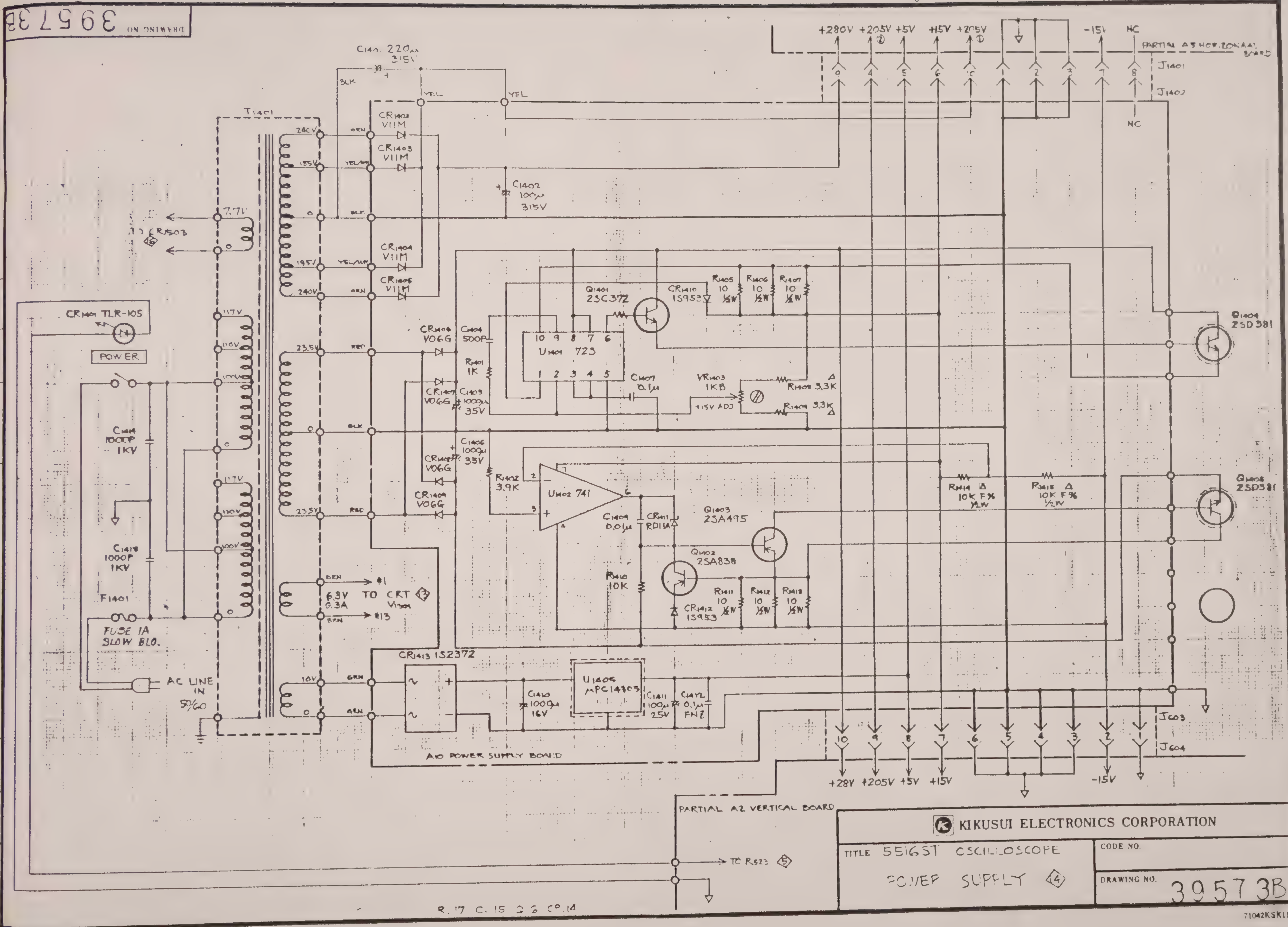
DRAWING NO 3957 3B
C1401 220μ 315V
T1401
CR1402 V11M
CR1403 V11M
CR1404 V11M
CR1405 V11M
C1402 100μ 315V
TO CR1503
7.7V
CR1401 TLR-105
POWER
C1414 1000P 1KV
C1415 1000P 1KV
F1401
FUSE 1A SLOW BLO.
AC LINE IN 50/60
CR1406 V06G
CR1407 V06G
CR1408 V06G
CR1409 V06G
C1404 500P
R1401 1K
C1403 1000μ 35V
C1406 1000μ 35V
U1401 723
C1407 0.1μ
VR1403 1KB
+15V ADJ
R1408 3.3K
R1409 3.3K
Q1401 2SC372
CR1410 1S953
R1405 10 ½W
R1406 10 ½W
R1407 10 ½W
Q1404 2SD381
Q1405 2SD381
R1402 3.9K
U1402 741
C1409 0.01μ
CR1411 RD11A
Q1403 2SA495
Q1402 2SA838
R1410 10K
R1411 10 ½W
R1412 10 ½W
R1413 10 ½W
CR1412 1S953
R1414 10K F% ½W
R1415 10K F% ½W
6.3V 0.3A
TO CRT V1501
#1
#13
CR1413 1S2372
U1403 μPC14305
C1410 1000μ 16V
C1411 100μ 25V
C1412 0.1μ FNZ
A10 POWER SUPPLY BOARD
PARTIAL A3 HORIZONTAL BOARD
J1401
J1402
NC
+280V +205V +5V +15V +205V -15V NC
J603
J604
+28V +205V +5V +15V -15V
PARTIAL A2 VERTICAL BOARD
TO R523
R.17 C.15 ?6 C°.14
KIKUSUI ELECTRONICS CORPORATION
TITLE 5516ST OSCILLOSCOPE
POWER SUPPLY
CODE NO.
DRAWING NO. 39573B
71042KSK11

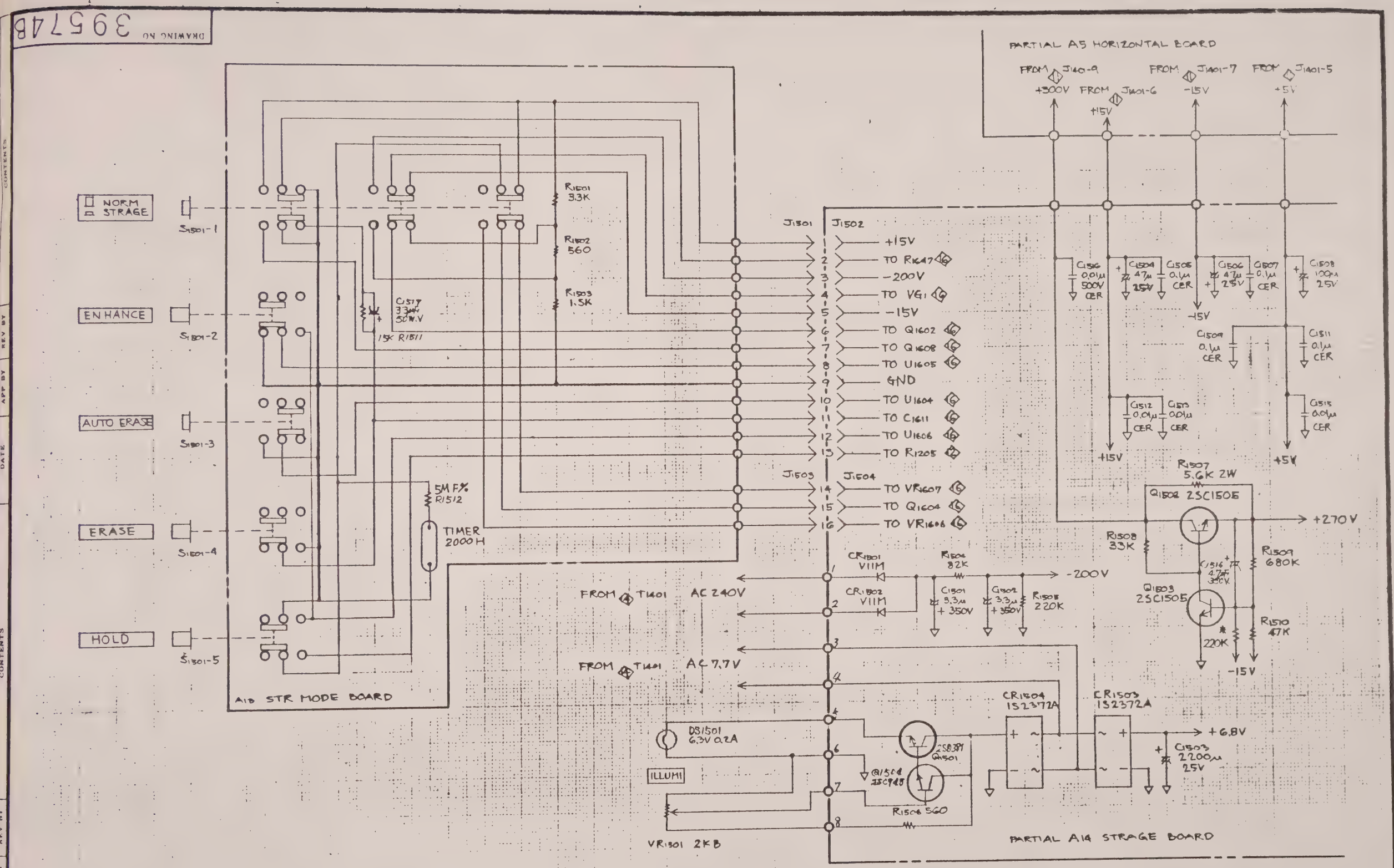
DRAWING NO 39574B
PARTIAL A5 HORIZONTAL BOARD
FROM J1401-9 +300V
FROM J1401-6 +15V
FROM J1401-7 -15V
FROM J1401-5 +5V
NORM STRAGE
ENHANCE
AUTO ERASE
ERASE
HOLD
S1501-1
S1501-2
S1501-3
S1501-4
S1501-5
R1501 3.3K
R1502 560
R1503 1.5K
C1517 33μF 50W.V
15K R1511
5M F% R1512
TIMER 2000H
A13 STR MODE BOARD
J1501
J1502
J1503
J1504
+15V
TO R1647
-200V
TO VG1
-15V
TO Q1602
TO Q1608
TO U1605
GND
TO U1604
TO C1611
TO U1606
TO R1205
TO VR1607
TO Q1604
TO VR1606
C1516 0.01μ 500V CER
C1504 47μ 25V
C1505 0.1μ CER
C1506 47μ 25V
C1507 0.1μ CER
C1508 100μ 25V
C1509 0.1μ CER
C1511 0.1μ CER
C1512 0.01μ CER
C1513 0.01μ CER
C1515 0.01μ CER
R1507 5.6K 2W
Q1502 2SC1505
+270V
R1508 33K
R1509 680K
C1516 47μF 350V
Q1503 2SC1505
R1510 47K
220K
-15V
CR1501 V11M
CR1502 V11M
R1504 82K
C1501 3.3μ +350V
C1502 3.3μ +350V
R1505 220K
-200V
FROM T1401 AC 240V
FROM T1401 AC 7.7V
DS1501 6.3V 0.2A
ILLUMI
VR1501 2KB
Q1501 2SB381
Q1504 2SC948
R1506 560
CR1504 1S2372A
CR1503 1S2372A
+6.8V
C1503 2200μ 25V
PARTIAL A14 STRAGE BOARD
KIKUSUI ELECTRONICS CORPORATION
TITLE 5516 ST OSCILLOSCOPE
STRAGE MODE 15
CODE NO.
DRAWING NO. 39574
71042KSK11

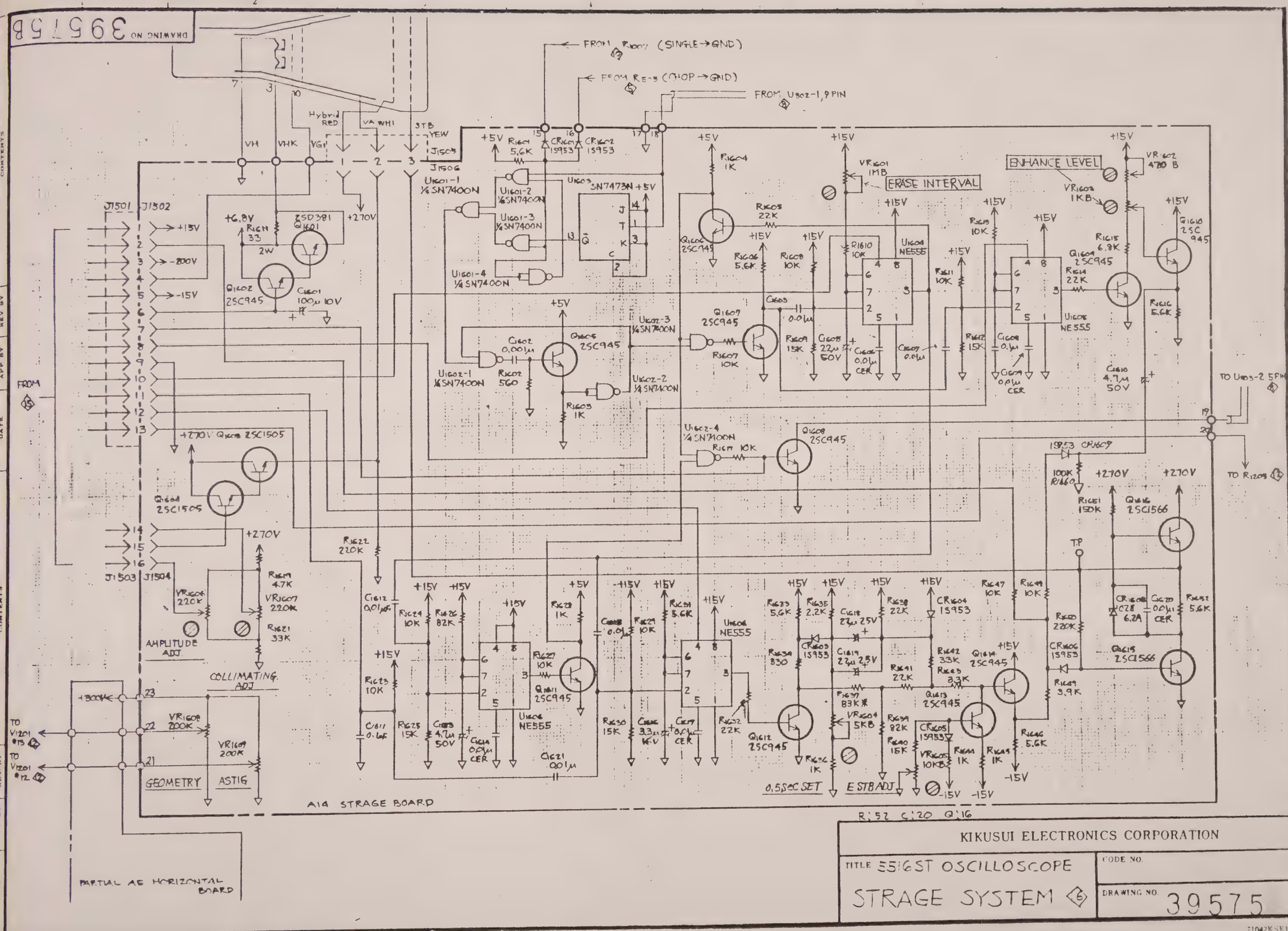
DRAWING NO 39575B
FROM R1007 (SINGLE→GND)
FROM R1005 (CHOP→GND)
FROM U802-1, 9 PIN
ENHANCE LEVEL
ERASE INTERVAL
AMPLITUDE ADJ.
COLLIMATING ADJ
GEOMETRY
ASTIG
0.5 SEC SET
E STB ADJ
A14 STRAGE BOARD
PARTIAL A5 HORIZONTAL BOARD
TO U803-2 5PIN
TO R1205
TO V1201 #13
TO V1201 #12
R:52 C:20 Q:16
KIKUSUI ELECTRONICS CORPORATION
TITLE 5516ST OSCILLOSCOPE
STRAGE SYSTEM
CODE NO.
DRAWING NO. 39575
71042KSK11

REPLACEABLE PARTS

ABBREVIATIONS

CER:	CERAMIC
C FILM:	CARBON FILM
C COMP:	CARBON COMPOSITION
CR T:	CATHODE RAY TUBE
ELECT:	ELECTROLYTIC
FET:	FIELD EFFECT TRANSISTOR
FXD:	FIXED
LED:	LIGHT EMITTING DIODE
M FILM:	METAL FILM
M GLAZE:	METAL GLAZE
M OX:	METAL OXIDE
M PLSTC FILM:	METALLIZED PLASTIC FILM
PLSTC FILM:	PLASTIC FILM
SI:	SILICON
TANT ELECT:	TANTALUM ELECTROLYTIC
VAR:	VARIABLE
WW:	WIREWOUND
*:	OPTIMUM VALUE SELECTED AT FACTORY. AVERAGE VALUE SHOWN (PART MAY BE OMITTED.)

REFERENCE DESIGNATOR	KIKUSUI PARTS NO.	DESCRIPTION	
A1 PCB-D	90-50-1300	PCB-D A1 ATTENUATOR	
C101	50-96-3500	FXD PLSTC FILM 0.1μF 630V	
C102	57-10-1110	VAR CER 2.5-22.5PF	
C103	57-10-1100	VAR CER 2-12PF	
C104	50-76-2000	FXD PLSTC 51PF 250V	
C105	57-10-1100	VAR CER 2-12PF	
C106	57-10-1110	VAR CER 2.5-22.5PF	
C107	50-76-2030	FXD PLSTC 510PF 250V	
C108	57-10-1110	VAR CER 2.5-22.5PF	
C109	57-10-1100	VAR CER 2-12PF	
C110	57-77-2000	FXD PLSTC 5PF 250V	
C111	57-10-1100	VAR CER 2-12PF	
C112	57-10-1110	VAR CER 2.5-22.5PF	
C113	52-01-3385	FXD CER 2220PF 500V	
C114	57-10-1100	VAR CER 2-12PF	
C115	52-05-2468	FXD CER 0.01μF 50V	
C116	52-05-2468	FXD CER 0.01μF 50V	
CR101	30-30-3830	NPN Si DIODE CONECTION	TOSHIBA 2SC383 TM
Q101,Q102	30-20-0581	FET VGS DIFFER LESS 20mV	SONY 2SK58-S2 SELECTED
Q103	30-30-3831	NPN Si PAIR WITH Q104	TOSHIBA 2SC383 TM
Q104	30-30-3831	NPN Si PAIR WITH Q103	TOSHIBA 2SC383 TM
R101	40-27-0332	FXD C FILM 33Ω 5% 1/4W	
R102	42-74-4900	FXD M FILM 900KΩ 1% 1/2W	
R103	42-74-4111	FXD M FILM 111KΩ 1% 1/2W	
R104	42-74-4990	FXD M FILM 990KΩ 1% 1/2W	
R105	42-74-3101	FXD M FILM 10.1KΩ 1% 1/2W	
R106	42-74-4500	FXD M FILM 500KΩ 1% 1/2W	
R107	42-74-5100	FXD M FILM 1MΩ 1% 1/2W	
R108	42-74-4750	FXD M FILM 750KΩ 1% 1/2W	
R109	42-74-4333	FXD M FILM 333KΩ 1% 1/2W	
R110	42-74-4330	FXD M FILM 330KΩ 1% 1/2W	
R111	42-74-5100	FXD M FILM 1MΩ 1% 1/2W	
R112	40-27-1333	FXD C FILM 330Ω 5% 1/4W	
R113	40-27-0563	FXD C FILM 56Ω 5% 1/4W	
R114	40-27-3393	FXD C FILM 39KΩ 5% 1/4W	
R115	40-27-2682	FXD C FILM 6.8KΩ 5% 1/4W	
R116	40-27-2682	FXD C FILM 6.8KΩ 5% 1/4W	
R117	40-27-3392	FXD C FILM 39KΩ 5% 1/4W	
R118	40-27-0563	FXD C FILM 56Ω 5% 1/4W	
R119	40-27-1103	FXD C FILM 100Ω 5% 1/4W	
R120	40-27-1103	FXD C FILM 100Ω 5% 1/4W	
R121	40-37-5101	FXD C FILM 1MΩ 5% 1/2W	

REFERENCE DESIGNATOR	KIKUSUI PARTS NO.	DESCRIPTION	
C201	50-96-3500	FXD PLSTC FILM 0.1μF 630V	
C202	57-10-1110	VAR CER 2.5-22.5PF	
C203	57-10-1100	VAR CER 2-12PF	
C204	50-76-2000	FXD PLSTC 51PF 250V	
C205	57-10-1100	VAR CER 2-12PF	
C206	57-10-1110	VAR CER 2.5-22.5PF	
C207	50-76-2030	FXD PLSTC 510PF 250V	
C208	57-10-1110	VAR CER 2.5-22.5PF	
C209	57-10-1100	VAR CER 2-12PF	
C110	57-77-2000	FXD PLSTC 5PF 250V	
C211	57-10-1100	VAR CER 2-12PF	
C212	57-10-1110	VAR CER 2.5-22.5PF	
C213	52-01-3385	FXD CER 2220PF 500V	
C214	57-10-1100	VAR CER 2-12PF	
C215	52-05-2468	FXD CER 0.01μF 50V	
C216	52-05-2468	FXD CER 0.01μF 50V	
CR201	30-30-3830	NPN Si DIODE CONECTION	TOSHIBA 2SC383 TM
Q201,Q202	30-20-0581	FET VGS DIFFER LESS 20mV	SONY 2SK58-S2 SELECTED
Q203	30-30-3831	NPN Si PAIR WITH Q204	TOSHIBA 2SC383 TM
Q204	30-30-3831	NPN Si PAIR WITH Q203	TOSHIBA 2SC383 TM
R201	40-27-0332	FXD C FILM 33Ω 5% 1/4W	
R202	42-74-4900	FXD M FILM 900KΩ 1% 1/2W	
R203	42-74-4111	FXD M FILM 111KΩ 1% 1/2W	
R204	42-74-4990	FXD M FILM 990KΩ 1% 1/2W	
R205	42-74-3101	FXD M FILM 10.1KΩ 1% 1/2W	
R206	42-74-4500	FXD M FILM 500KΩ 1% 1/2W	
R207	42-74-5100	FXD M FILM 1MΩ 1% 1/2W	
R208	42-74-4750	FXD M FILM 750KΩ 1% 1/2W	
R209	42-74-4333	FXD M FILM 333KΩ 1% 1/2W	
R210	42-74-4330	FXD M FILM 330KΩ 1% 1/2W	
R211	42-74-5100	FXD M FILM 1MΩ 1% 1/2W	
R212	40-27-1333	FXD C FILM 330Ω 5% 1/4W	
R213	40-27-0563	FXD C FILM 56Ω 5% 1/4W	
R214	40-27-3393	FXD C FILM 39KΩ 5% 1/4W	
R215	40-27-2682	FXD C FILM 6.8KΩ 5% 1/4W	
R216	40-27-2682	FXD C FILM 6.8KΩ 5% 1/4W	
R217	40-27-3392	FXD C FILM 39KΩ 5% 1/4W	
R218	40-27-0563	FXD C FILM 56Ω 5% 1/4W	
R219	40-27-1103	FXD C FILM 100Ω 5% 1/4W	
R220	40-27-1103	FXD C FILM 100Ω 5% 1/4W	
R221	40-37-5101	FXD C FILM 1MΩ 5% 1/2W	

REFERENCE DESIGNATOR	KIKUSUI PARTS NO.	DESCRIPTION
A2 PCB-D	90-50-1760	PCB-D A2 VERTICAL
C301	57-10-1170	VAR CER 5-55PF
C302	52-06-3205	FXD CER 68PF 500V
C303	54-00-0321	FXD ELECT 100μF 50V
C304	52-05-2468	FXD CER 0.01μF 50V
C305	52-06-3145	FXD CER 22PF 500V
C306	54-00-0311	FXD ELECT 10μF 50V
C307	57-10-1150	VAR CER 2.5-22.5PF
C309	57-10-1150	VAR CER 2.5-22.5PF
C310	52-05-2468	FXD CER 0.01μF 50V
C311	52-05-2468	FXD CER 0.01μF 50V
C312	52-05-1498	FXD CER 0.1μF 25V
C313	54-00-0121	FXD ELECT 100μF 25V
C314	54-00-0121	FXD ELECT 100μF 25V
C315	52-05-1498	FXD CER 0.1μF 25V
C316	57-10-1150	VAR CER 2.5-22.5PF
C401	57-10-1170	VAR CER 5-55PF
C402	52-06-3165	FXD CER 33PF 500V
C403	54-00-0321	FXD ELECT 100μF 50V
C404	52-05-2468	FXD CER 0.01μF 50V
C405	52-06-3145	FXD CER 22PF 500V
C406	54-00-0311	FXD ELECT 10μF 50V
C407	57-10-1150	VAR CER 2.5-22.5PF
C409	57-10-1150	VAR CER 2.5-22.5PF
C410	52-05-2468	FXD CER 0.01μF 50V
C411	52-05-2468	FXD CER 0.01μF 50V
C412	52-05-1498	FXD CER 0.1μF 25V
C413	52-05-1498	FXD CER 0.1μF 25V
C414	54-00-0121	FXD ELECT 100μF 25V
C415	54-00-0121	FXD ELECT 100μF 25V
C416	57-10-1150	VAR CER 2.5-22.5PF
C501	52-05-2468	FXD CER 0.01μF 50V
C502	52-01-2285	FXD CER 330PF 50V
C503	52-01-2285	FXD CER 330PF 50V
C504	52-05-2468	FXD CER 0.01μF 50V
C505	50-67-0010	FXD PLSTC 0.0022μF 100V
C506	50-76-2000	FXD PLSTC 51PF 250V
C507	50-76-2000	FXD PLSTC 51PF 250V
C508	54-00-0314	FXD ELECT 47μF 50V
C509	54-00-0314	FXD ELECT 47μF 50V
C510	50-67-0010	FXD PLSTC 0.0022μF 100V
C511	50-76-2010	FXD PLSTC 100PF 250V

REFERENCE DESIGNATOR		KIKUSUI PARTS NO.	DESCRIPTION	
C512		54-29-1080	FXD ELECT 1μF 50V	
C513		50-76-2010	FXD PLSTC 100PF 250V	
C514		52-02-2468	FXD CER 0.01μF 50V	
C515		52-02-2468	FXD CER 0.01μF 50V	
C516		52-02-2468	FXD CER 0.01μF 50V	
C517		52-02-2468	FXD CER 0.01μF 50V	
C518		54-00-0121	FXD ELECT 100μF 25V	
C601		52-05-2468	FXD CER 0.01μF 50V	
C602		52-06-3051	FXD CER 5PF 500V	
C603		54-00-0311	FXD ELECT 10μF 50V	
C604		52-05-2468	FXD CER 0.01μF 50V	
C607	*	50-77-2020	FXD PLSTC 20PF 250V	
C608		57-10-1160	VAR CER 4-44PF	
C609		57-10-1170	VAR CER 5-55PF	
C610	*	50-76-2010	FXD PLSTC 100PF 250V	
C613		52-05-2468	FXD CER 0.01μF 50V	
C614		52-05-2468	FXD CER 0.01μF 50V	
C615		54-00-0121	FXD ELECT 100μF 25V	
C616		54-00-0121	FXD ELECT 100μF 25V	
C617		52-05-2468	FXD CER 0.01μF 50V	
CR301		32-11-5880	DIODE Si VR30V Io 120mA	TOSHIBA 1S1588
CR401		32-11-5880	DIODE Si	TOSHIBA 1S1588
CR501		32-11-5880	DIODE Si	TOSHIBA 1S1588
CR502		32-11-5880	DIODE Si	TOSHIBA 1S1588
CR503		32-11-5880	DIODE Si	TOSHIBA 1S1588
CR504		32-11-5880	DIODE Si	TOSHIBA 1S1588
CR505		32-11-5880	DIODE Si	TOSHIBA 1S1588
CR506		32-11-5880	DIODE Si	TOSHIBA 1S1588
CR507		32-11-5880	DIODE Si	TOSHIBA 1S1588
CR601		32-11-5880	DIODE Si	TOSHIBA 1S1588
CR602		32-11-5880	DIODE Si	TOSHIBA 1S1588
CR603		32-11-5880	DIODE Si	TOSHIBA 1S1588
CR604		32-11-5880	DIODE Si	TOSHIBA 1S1588
CR605		32-11-5880	DIODE Si	TOSHIBA 1S1588
CR606		32-11-5880	DIODE Si	TOSHIBA 1S1588
CR607		32-11-5880	DIODE Si	TOSHIBA 1S1588
CR608		32-11-5880	DIODE Si	TOSHIBA 1S1588
CR609		32-91-0010	DIODE Si ZENER 8.5-9.6V	NEC RD9.1E-B

REFERENCE DESIGNATOR	KIKUSUI PARTS NO.	DESCRIPTION	
K301	71-16-0110	RELAY DC24V 10mA	OKITA BMG-101
K401	71-16-0110	RELAY DC 24V 10mA	OKITA BMG-101
L301	67-10-0150	INDUCTOR 100μH	TAIYO YUDEN FL7H 101K
L302	67-10-0150	INDUCTOR 100μH	
L401	67-10-0150	INDUCTOR 100μH	
L402	67-10-0150	INDUCTOR 100μH	
Q301	30-30-3831	NPN Si	TOSHIBA 2SC383TM PAIR
Q302	30-30-3831	NPN Si	TOSHIBA 2SC383TM PAIR
Q303	30-10-4952	PNP Si	TOSHIBA 2SA495G-TM-Y
Q304	30-10-4952	PNP Si	TOSHIBA 2SA495G-TM-Y
Q305	30-31-7301	NPN Si	NEC 2SC1730-L
Q306	30-31-7301	NPN Si	NEC 2SC1730-L
Q307	30-31-7301	NPN Si	NEC 2SC1730-L
Q308	30-31-7301	NPN Si	NEC 2SC1730-L
Q309	30-10-4952	PNP Si	TOSHIBA 2SA495G-TM-Y
Q310	30-30-9001	NPN Si	NEC 2SC900
Q311	30-30-9001	NPN Si	NEC 2SC900
Q312	30-30-9451	NPN Si	NEC 2SC945-Q
Q313	30-30-9451	NPN Si	NEC 2SC945-Q
Q401	30-30-3831	NPN Si	TOSHIBA 2SC383TM PAIR
Q402	30-30-3831	NPN Si	TOSHIBA 2SC383TM PAIR
Q403	30-10-4952	PNP Si	TOSHIBA 2SA495G-TM-Y
Q404	30-10-4952	PNP Si	TOSHIBA 2SA495G-TM-Y
Q405	30-31-7301	NPN Si	NEC 2SC1730-L
Q406	30-31-7301	NPN Si	NEC 2SC1730-L
Q407	30-31-7301	NPN Si	NEC 2SC1730-L
Q408	30-31-7301	NPN Si	NEC 2SC1730-L
Q409	30-10-4952	PNP Si	TOSHIBA 2SA495G-TM-Y
Q410	30-30-9001	NPN Si	NEC 2SC900
Q411	30-30-9001	NPN Si	NEC 2SC900
Q412	30-30-9451	NPN Si	NEC 2SC945-Q
Q413	30-30-9451	NPN Si	NEC 2SC945-Q
Q601	30-31-7301	NPN Si	NEC 2SC1730-L
Q602	30-31-7301	NPN Si	NEC 2SC1730-L
Q603	30-31-7301	NPN Si	NEC 2SC1730-L
Q604	30-31-7301	NPN Si	NEC 2SC1730-L
Q605	30-10-4952	PNP Si	TOSHIBA 2SA495G-TM-Y
Q606	30-10-4952	PNP Si	TOSHIBA 2SA495G-TM-Y
Q607	30-10-4952	PNP Si	TOSHIBA 2SA495G-TM-Y
Q608	30-31-9730	NPN Si	MATSUSHITA 2SC1973
Q609	30-31-9730	NPN Si	MATSUSHITA 2SC1973

REFERENCE DESIGNATOR	KIKUSUI PARTS NO.	DESCRIPTION
R301	40-27-2272	FXD C FILM 2.7KΩ 5% 1/4W
R302	40-27-1102	FXD C FILM 100Ω 5% 1/4W
R303	40-27-0333	FXD C FILM 33Ω 5% 1/4W
R304	40-27-2123	FXD C FILM 1.2KΩ 5% 1/4W
R305	40-27-2682	FXD C FILM 6.8KΩ 5% 1/4W
R306	40-27-2123	FXD C FILM 1.2KΩ 5% 1/4W
R307	40-27-0333	FXD C FILM 33Ω 5% 1/4W
R308	40-27-2272	FXD C FILM 2.7KΩ 5% 1/4W
R309	40-27-1682	FXD C FILM 680Ω 5% 1/4W
R310	40-27-1102	FXD C FILM 100Ω 5% 1/4W
R311	40-27-1102	FXD C FILM 100Ω 5% 1/4W
R312	40-27-2183	FXD C FILM 1.8KΩ 5% 1/4W
R313	40-27-2183	FXD C FILM 1.8KΩ 5% 1/4W
R314	40-27-1822	FXD C FILM 820Ω 5% 1/4W
R315	40-27-1102	FXD C FILM 100Ω 5% 1/4W
R316	40-27-2152	FXD C FILM 1.5KΩ 5% 1/4W
R317	40-27-2152	FXD C FILM 1.5KΩ 5% 1/4W
R318	40-27-1102	FXD C FILM 100Ω 5% 1/4W
R319	40-27-3122	FXD C FILM 12KΩ 5% 1/4W
R320	40-27-0562	FXD C FILM 56Ω 5% 1/4W
R321	40-27-1102	FXD C FILM 100Ω 5% 1/4W
R322	40-27-1102	FXD C FILM 100Ω 5% 1/4W
R323	40-27-0562	FXD C FILM 56Ω 5% 1/4W
R324	40-27-1392	FXD C FILM 390Ω 5% 1/4W
R325	40-27-2272	FXD C FILM 2.7KΩ 5% 1/4W
R326	40-27-2222	FXD C FILM 2.2KΩ 5% 1/4W
R327	40-27-1332	FXD C FILM 390Ω 5% 1/4W
R328	40-27-2222	FXD C FILM 2.2KΩ 5% 1/4W
R329	40-27-2562	FXD C FILM 5.6KΩ 5% 1/4W
R330	40-27-0562	FXD C FILM 56Ω 5% 1/4W
R331	40-27-1222	FXD C FILM 220Ω 5% 1/4W
R332	40-27-0102	FXD C FILM 10Ω 5% 1/4W
R333	40-27-1272	FXD C FILM 270Ω 5% 1/4W
R334	40-27-1272	FXD C FILM 270Ω 5% 1/4W
R335	40-27-0102	FXD C FILM 10Ω 5% 1/4W
R336	40-27-1332	FXD C FILM 330Ω 5% 1/4W
R337	40-27-1332	FXD C FILM 330Ω 5% 1/4W
R338	40-27-2392	FXD C FILM 3.9KΩ 5% 1/4W
R339	40-27-2392	FXD C FILM 3.9KΩ 5% 1/4W
R340	40-27-1222	FXD C FILM 220Ω 5% 1/4W
R341	40-27-1102	FXD C FILM 100Ω 5% 1/4W
R342	40-27-2182	FXD C FILM 1.8KΩ 5% 1/4W
R343	40-27-2562	FXD C FILM 5.6KΩ 5% 1/4W
R344	40-27-3122	FXD C FILM 12KΩ 5% 1/4W
R345	40-27-2182	FXD C FILM 1.8KΩ 5% 1/4W
R346	40-27-2562	FXD C FILM 5.6KΩ 5% 1/4W
R347	40-27-3122	FXD C FILM 12KΩ 5% 1/4W

REFERENCE DESIGNATOR	KIKUSUI PARTS NO.	DESCRIPTION
R352	40-27-2103	FXD C FILM 1KΩ 5% 1/4W
R353	40-27-2562	FXD C FILM 5.6KΩ 5% 1/4W
R355	40-27-2102	FXD C FILM 1KΩ 5% 1/4W
R401	40-27-2272	FXD C FILM 2.7KΩ 5% 1/4W
R402	40-27-1102	FXD C FILM 100Ω 5% 1/4W
R403	40-27-0333	FXD C FILM 33Ω 5% 1/4W
R404	40-27-2123	FXD C FILM 1.2KΩ 5% 1/4W
R405	40-27-2683	FXD C FILM 6.8KΩ 5% 1/4W
R406	40-27-2123	FXD C FILM 1.2KΩ 5% 1/4W
R407	40-27-0333	FXD C FILM 33Ω 5% 1/4W
R408	40-27-2272	FXD C FILM 2.7KΩ 5% 1/4W
R409	40-27-1682	FXD C FILM 680Ω 5% 1/4W
R410	40-27-1102	FXD C FILM 100Ω 5% 1/4W
R411	40-27-1102	FXD C FILM 100Ω 5% 1/4W
R412	40-27-2182	FXD C FILM 1.8KΩ 5% 1/4W
R413	40-27-2182	FXD C FILM 1.8KΩ 5% 1/4W
R414	40-27-1822	FXD C FILM 820Ω 5% 1/4W
R415	40-27-1102	FXD C FILM 100Ω 5% 1/4W
R416	40-27-2153	FXD C FILM 1.5KΩ 5% 1/4W
R417	40-27-2152	FXD C FILM 1.5KΩ 5% 1/4W
R418	40-27-1102	FXD C FILM 100Ω 5% 1/4W
R419	40-27-3122	FXD C FILM 12KΩ 5% 1/4W
R420	40-27-2562	FXD C FILM 5.6KΩ 5% 1/4W
R421	40-27-0562	FXD C FILM 56Ω 5% 1/4W
R422	40-27-1102	FXD C FILM 100Ω 5% 1/4W
R423	40-27-1102	FXD C FILM 100Ω 5% 1/4W
R424	40-27-0562	FXD C FILM 56Ω 5% 1/4W
R425	40-27-1392	FXD C FILM 390Ω 5% 1/4W
R426	40-27-2272	FXD C FILM 2.7KΩ 5% 1/4W
R427	40-27-2222	FXD C FILM 2.2KΩ 5% 1/4W
R428	40-27-1332	FXD C FILM 330Ω 5% 1/4W
R429	40-27-2222	FXD C FILM 2.2KΩ 5% 1/4W
R430	40-27-2562	FXD C FILM 5.6KΩ 5% 1/4W
R431	40-27-0562	FXD C FILM 56Ω 5% 1/4W
R432	40-27-1222	FXD C FILM 220Ω 5% 1/4W
R433	40-27-0102	FXD C FILM 10Ω 5% 1/4W
R434	40-27-1272	FXD C FILM 270Ω 5% 1/4W
R436	40-27-1272	FXD C FILM 270Ω 5% 1/4W
R437	40-27-0102	FXD C FILM 10Ω 5% 1/4W
R438	40-27-1332	FXD C FILM 330Ω 5% 1/4W
R439	40-27-1332	FXD C FILM 330Ω 5% 1/4W
R440	40-27-2392	FXD C FILM 3.9KΩ 5% 1/4W
R441	40-27-2392	FXD C FILM 3.9KΩ 5% 1/4W
R442	40-27-1102	FXD C FILM 100Ω 5% 1/4W
R443	40-27-2182	FXD C FILM 1.8KΩ 5% 1/4W
R444	40-27-2182	FXD C FILM 1.8KΩ 5% 1/4W

REFERENCE DESIGNATOR	KIKUSUI PARTS NO.	DESCRIPTION
R445	40-27-2562	FXD C FILM 5.6KΩ 5% 1/4W
R446	40-27-2562	FXD C FILM 5.6KΩ 5% 1/4W
R447	40-27-3122	FXD C FILM 12KΩ 5% 1/4W
R448	40-27-3122	FXD C FILM 12KΩ 5% 1/4W
R449	40-27-2103	FXD C FILM 1KΩ 5% 1/4W
R450	40-27-2102	FXD C FILM 1KΩ 5% 1/4W
R501	40-27-2562	FXD C FILM 5.6KΩ 5% 1/4W
R502	40-27-2332	FXD C FILM 3.3KΩ 5% 1/4W
R503	40-27-2332	FXD C FILM 3.3KΩ 5% 1/4W
R504	40-27-1102	FXD C FILM 100Ω 5% 1/4W
R505	40-27-2562	FXD C FILM 5.6KΩ 5% 1/4W
R506	40-27-2332	FXD C FILM 3.3KΩ 5% 1/4W
R507	40-27-2332	FXD C FILM 3.3KΩ 5% 1/4W
R508	40-27-2102	FXD C FILM 1KΩ 5% 1/4W
R509	40-27-2102	FXD C FILM 1KΩ 5% 1/4W
R510	40-27-1332	FXD C FILM 330Ω 5% 1/4W
R511	40-27-1102	FXD C FILM 100Ω 5% 1/4W
R514	40-27-1332	FXD C FILM 330Ω 5% 1/4W
R515	40-27-1222	FXD C FILM 220Ω 5% 1/4W
R516	40-27-1472	FXD C FILM 470Ω 5% 1/4W
R517	40-27-1332	FXD C FILM 330Ω 5% 1/4W
R518	40-27-3102	FXD C FILM 10KΩ 5% 1/4W
R519	42-74-2360	FXD M FILM 3.6KΩ 1% 1/2W
R520	42-74-1400	FXD M FILM 400Ω 1% 1/2W
R522	40-27-0562	FXD C FILM 56Ω 5% 1/4W
R523	40-27-1152	FXD C FILM 150Ω 5% 1/4W
R601	40-27-2332	FXD C FILM 3.3KΩ 5% 1/4W
R602	40-27-1102	FXD C FILM 100Ω 5% 1/4W
R603	40-27-2332	FXD C FILM 3.3KΩ 5% 1/4W
R604	40-27-1102	FXD C FILM 100Ω 5% 1/4W
R605	40-27-3102	FXD C FILM 10KΩ 5% 1/4W
R606	40-27-2272	FXD C FILM 2.7KΩ 5% 1/4W
R607	40-27-1102	FXD C FILM 100Ω 5% 1/4W
R608	40-27-2272	FXD C FILM 2.7KΩ 5% 1/4W
R609	40-27-2272	FXD C FILM 2.7KΩ 5% 1/4W
R610	40-27-2102	FXD C FILM 1KΩ 5% 1/4W
R611	40-27-2102	FXD C FILM 1KΩ 5% 1/4W
R612	40-27-0563	FXD C FILM 56Ω 5% 1/4W
R613	40-27-0562	FXD C FILM 56Ω 5% 1/4W
R614	40-27-1102	FXD C FILM 100Ω 5% 1/4W
R615	40-27-1102	FXD C FILM 100Ω 5% 1/4W
R616	40-27-0562	FXD C FILM 56Ω 5% 1/4W
R617	40-27-0563	FXD C FILM 56Ω 5% 1/4W
R618	40-27-2102	FXD C FILM 1KΩ 5% 1/4W

REFERENCE DESIGNATOR	KIKUSUI PARTS NO.	DESCRIPTION	
R619	40-27-3332	FXD C FILM 33KΩ 5% 1/4W	
R620	40-27-2102	FXD C FILM 1KΩ 5% 1/4W	
R621	40-27-2182	FXD C FILM 1.8KΩ 5% 1/4W	
R622	40-27-2562	FXD C FILM 5.6KΩ 5% 1/4W	
R623	40-27-0562	FXD C FILM 56Ω 5% 1/4W	
R624	40-27-1562	FXD C FILM 560Ω 5% 1/4W	
R626	40-27-0562	FXD C FILM 56Ω 5% 1/4W	
R627	40-27-0562	FXD C FILM 56Ω 5% 1/4W	
R628	40-37-1471	FXD C FILM 470Ω 5% 1/2W	
R629	40-37-1471	FXD C FILM 470Ω 5% 1/2W	
R1201	40-27-3102	FXD C FILM 10KΩ 5% 1/4W	
S401	81-01-0180	SWITCH PUSH POLARITY	ALPS SUB11-5
S501	81-04-0110	SWITCH PUSH MODE	ALPS SUB41-2
U501	35-10-0020	IC QUAD 2-INPUT POSI NAND	TOSHIBA TA3400AP
U502	35-10-0020	IC QUAD 2-INPUT POSI NAND	TOSHIBA TA3400AP
U503	35-10-0020	IC QUAD 2-INPUT POST NAND	TOSHIBA TA3400AP
U504	35-10-0020	IC QUAD 2-INPUT POSI NAND	TOSHIBA TA3400AP
VR301	48-14-1200	VAR M FILM 200Ω-B	NOBLE TM10K PH
VR302	48-14-1200	VAR M FILM 200Ω-B	NOBLE TM10K PH
VR303	48-14-2100	VAR M FILM 1KΩ-B	NOBLE TM10K PH
VR306	48-14-2500	VAR M FILM 5KΩ-B	NOBLE TM10K PH
VR312	48-14-2500	VAR M FILM 5KΩ-B	NOBLE TM10K PH
VR401	48-14-1200	VAR M FILM 200Ω-B	NOBLE TM10K PH
VR402	48-14-1200	VAR M FILM 200Ω-B	NOBLE TM10K PH
VR403	48-14-2100	VAR M FILM 1KΩ-B	NOBLE TM10K PH
VR406	48-14-2500	VAR M FILM 5KΩ-B	NOBLE TM10K PH
VR407	48-14-2100	VAR M FILM 1KΩ-B	NOBLE TM10K PH
VR409	48-14-2500	VAR M FILM 5KΩ-B	NOBLE TM10K PH
VR501	48-14-1500	VAR M FILM 500Ω-B	NOBLE TM10K PH
VR502	48-14-3101	VAR M FILM 10KΩ-B	NOBLE TM10K PH
VR601	48-14-2500	VAR M FILM 5KΩ-B	NOBLE TM10K PH
VR602	48-14-2100	VAR M FILM 1KΩ-B	NOBLE TM10K PH
VR603	48-14-2200	VAR M FILM 2KΩ-B	NOBLE TM10K PH
VR604	48-14-1200	VAR M FILM 200Ω-B	NOBLE TM10K PH
VR1201	46-16-2501	VAR M GLAZE 5KΩ-B	HOKURIKU RG161P15S
VR1202	46-16-5100	VAR M GLAZE 1MΩ-B	HOKURIKU RG161P15S

REFERENCE DESIGNATOR	KIKUSUI PARTS NO.	DESCRIPTION	
A3 PCB-S	90-50-1770	PCB-S A3 FINAL	
C611	52-02-3466	FXD CER 0.01μF 500V	
C612	52-05-2468	FXD CER 0.01μF 50V	
Q610	30-31-0121	NPN Si	MATSUSHITA 2SC1012A
Q611	30-31-0121	NPN Si	MATSUSHITA 2SC1012A
R630	40-27-0562	FXD C FILM 56Ω 5% 1/4W	
R631	40-27-0562	FXD C FILM 56Ω 5% 1/4W	
R632	44-95-2470	FXD M OX 4.7KΩ 5% 5W	
R633	44-95-2470	FXD M OX 4.7KΩ 5% 5W	
A4 PCB-D	90-50-1330	PCB-D A4 TRIGGER	
C701	50-76-2020	FXD PLSTC 200PF 250V	
C702	52-01-3385	FXD CER 2220PF 500V	
C703	52-05-2468	FXD CER 0.01μF 50V	
C704	52-05-2468	FXD CER 0.01μF 50V	
C705	52-05-2468	FXD CER 0.01μF 50V	
C706	52-05-2468	FXD CER 0.01μF 50V	
C707	50-76-2010	FXD PLSTC 100PF 250V	
C708	50-76-2030	FXD PLSTC 200PF 250V	
C709	50-76-2000	FXD PLSTC 51PF 250V	
C710	52-05-2468	FXD CER 0.01μF 50V	
C712	52-05-2468	FXD CER 0.01μF 50V	
C713	52-05-2468	FXD CER 0.01μF 50V	
C714	52-05-2468	FXD CER 0.01μF 50V	
C715	54-00-0311	FXD ELECT 10μF 50V	
C716	52-05-1498	FXD CER 0.1μF 25V	
C717	52-05-2468	FXD CER 0.01μF 50V	
C718	52-05-2468	FXD CER 0.01μF 50V	
C719	52-05-2468	FXD CER 0.01μF 50V	
C720	54-01-0304	FXD ELECT 4.7μF 50V	
C721	52-05-2468	FXD CER 0.01μF 50V	
C722	50-76-2030	FXD PLSTC 200PF 250V	
C723	50-76-2030	FXD PLSTC 200PF 250V	
C724	50-76-2030	FXD PLSTC 200PF 250V	
C725	52-05-2468	FXD CER 0.01μF 50V	
C726	50-67-0030	FXD PLSTC 0.01μF 100V	
C727	50-67-0030	FXD PLSTC 0.01μF 100V	
C728	54-00-0311	FXD ELECT 10μF 50V	
C729	54-29-1080	FXD ELECT 1μF 50V B.P	
C730	50-76-2010	FXD PLSTC 100PF 250V	
C731	52-05-2468	FXD CER 0.01μF 50V	
C732	52-05-2468	FXD CER 0.01μF 50V	
C733	54-00-0311	FXD ELECT 10μF 50V	

REFERENCE DESIGNATOR	KIKUSUI PARTS NO.	DESCRIPTION	
CR701	32-11-5880	DIODE Si 30V 0.5A 300mW	TOSHIBA 1S1588
CR702	32-11-5880	DIODE Si	
CR703	32-11-5880	DIODE Si	
CR704	32-11-5880	DIODE Si	
CR705	32-11-5880	DIODE Si	
CR706	32-11-5880	DIODE Si	
CR707	32-11-5880	DIODE Si	
CR708	32-11-5880	DIODE Si	
CR709	32-11-5880	DIODE Si	
K701	71-16-0100	RELAY DC24V 13mA	OKITA DIP-1M-24
K702	71-16-0100	RELAY DC24V 13mA	OKITA DIP-1M-24
L703	67-10-0140	INDUCTOR 10μH	TAIYO YUDEN FL5H 100K
Q701(Q702)	31-20-0580	FET	SONY 2SK58
Q703	30-10-4952	PNP Si	TOSHIBA 2SA495G-TM-Y
Q704	30-30-3830	NPN Si	TOSHIBA 2SC383TM
Q705	30-30-4581	NPN Si	HITACHI 2SC458B
Q706	30-30-3830	NPN Si	TOSHIBA 2SC383TM
Q707	30-30-3830	NPN Si	TOSHIBA 2SC383TM
Q708	30-30-3830	NPN Si	TOSHIBA 2SC383TM
Q709	30-30-4580	NPN Si	HITACHI 2SC458B
Q710	30-10-4952	PNP Si	TOSHIBA 2SA495G-TM-Y
Q711	30-30-4580	NPN Si	HITACHI 2SC458B
Q712	30-30-4580	NPN Si	HITACHI 2SC458B
Q713	30-10-4952	PNP Si	TOSHIBA 2SA495G-TM-Y
R701	40-27-3102	FXD C FILM 10KΩ 5% 1/4W	
R702	40-27-0332	FXD C FILM 33Ω 5% 1/4W	
R703	40-27-0332	FXD C FILM 33Ω 5% 1/4W	
R704	40-27-0332	FXD C FILM 33Ω 5% 1/4W	
R705	40-27-4102	FXD C FILM 100KΩ 5% 1/4W	
R706	40-27-4332	FXD C FILM 330KΩ 5% 1/4W	
R707	40-27-1332	FXD C FILM 330Ω 5% 1/4W	
R708	40-27-0562	FXD C FILM 56Ω 5% 1/4W	
R709	40-27-1102	FXD C FILM 100Ω 5% 1/4W	
R710	40-27-1222	FXD C FILM 220Ω 5% 1/4W	
R711	40-27-1102	FXD C FILM 100Ω 5% 1/4W	
R712	40-27-0562	FXD C FILM 56Ω 5% 1/4W	
R713	40-27-1102	FXD C FILM 100Ω 5% 1/4W	
R714	40-27-2472	FXD C FILM 4.7KΩ 5% 1/4W	
R715	40-27-1102	FXD C FILM 100Ω 5% 1/4W	
R716	40-27-1102	FXD C FILM 100Ω 5% 1/4W	
R717	40-27-2152	FXD C FILM 1.5KΩ 5% 1/4W	
R718	40-27-4102	FXD C FILM 100KΩ 5% 1/4W	
R719	40-27-2272	FXD C FILM 2.7KΩ 5% 1/4W	
R720	40-27-2272	FXD C FILM 2.7KΩ 5% 1/4W	

REFERENCE DESIGNATOR	KIKUSUI PARTS NO.	DESCRIPTION	
R721	40-27-0472	FXD C FILM 47Ω 5% 1/4W	
R722	40-27-0472	FXD C FILM 47Ω 5% 1/4W	
R723	40-27-2562	FXD C FILM 5.6KΩ 5% 1/4W	
R724	40-27-2222	FXD C FILM 2.2KΩ 5% 1/4W	
R725	40-27-2332	FXD C FILM 3.3KΩ 5% 1/4W	
R726	40-27-2472	FXD C FILM 4.7KΩ 5% 1/4W	
R727	40-27-2822	FXD C FILM 8.2KΩ 5% 1/4W	
R728	40-27-0332	FXD C FILM 33Ω 5% 1/4W	
R729	40-27-2562	FXD C FILM 5.6KΩ 5% 1/4W	
R730	40-27-2822	FXD C FILM 8.2KΩ 5% 1/4W	
R731	40-27-1102	FXD C FILM 100Ω 5% 1/4W	
R732	40-27-0332	FXD C FILM 33Ω 5% 1/4W	
R733	40-27-2152	FXD C FILM 1.5KΩ 5% 1/4W	
R734	40-27-2562	FXD C FILM 5.6KΩ 5% 1/4W	
R735	40-27-2562	FXD C FILM 5.6KΩ 5% 1/4W	
R736	40-27-2222	FXD C FILM 2.2KΩ 5% 1/4W	
R737	40-27-3102	FXD C FILM 10KΩ 5% 1/4W	
R738	40-27-1332	FXD C FILM 330Ω 5% 1/4W	
R739	40-27-1102	FXD C FILM 100Ω 5% 1/4W	
R741	40-27-2102	FXD C FILM 1KΩ 5% 1/4W	
R742	40-27-1562	FXD C FILM 560Ω 5% 1/4W	
R743	40-27-2102	FXD C FILM 1KΩ 5% 1/4W	
R744	40-27-0562	FXD C FILM 56Ω 5% 1/4W	
R745	40-27-3102	FXD C FILM 10KΩ 5% 1/4W	
R746	40-27-1332	FXD C FILM 330Ω 5% 1/4W	
R747	40-27-1102	FXD C FILM 100Ω 5% 1/4W	
R748	40-27-5102	FXD C FILM 1MΩ 5% 1/4W	
R749	40-27-5102	FXD C FILM 1MΩ 5% 1/4W	
R750	40-27-2562	FXD C FILM 5.6KΩ 5% 1/4W	
R751	40-27-2272	FXD C FILM 2.7KΩ5% 1/4W	
R752	40-27-3102	FXD C FILM 10KΩ 5% 1/4W	
R754	40-27-3102	FXD C FILM 10KΩ 5% 1/4W	
R755	40-27-3102	FXD C FILM 10KΩ 5% 1/4W	
R756	40-27-3102	FXD C FILM 10KΩ 5% 1/4W	
R757	40-27-2472	FXD C FILM 4.7KΩ 5% 1/4W	
R758	40-27-2392	FXD C FILM 3.9KΩ 5% 1/4W	
R759	40-27-3152	FXD C FILM 15KΩ 5% 1/4W	
R760	40-27-3152	FXD C FILM 15KΩ 5% 1/4W	
S701	81-05-0070	SW PUSH	ALPS SUB51-3
S702	-	SEE VR704(A PART OF VR704)	
U701	34-00-0020	IC OP AMP	NS LM741CH
U702	35-10-0070	IC	TEXAS SN74S00N
U703	35-10-0070	IC	TEXAS SN74S00N

REFERENCE DESIGNATOR	KIKUSUI PARTS NO.	DESCRIPTION	
VR701	48-15-1500	VAR M FILM 500Ω-B	NOBLE TM 10K PVB
VR702	48-15-2500	VAR M FILM 5KΩ-B	NOBLE TM 10K PVB
VR703	48-15-2100	VAR M FILM 1KΩ-B	NOBLE TM 10K PVB
VR704	45-01-0230	VAR C COMP 5KΩ-B	ALPS VM13E-VER22
A5 PCB-D	90-50-1780	PCB-D A5 HORIZONTAL	
C801	54-00-0311	FXD ELECT 10μF 50V	
C802	54-00-0114	FXD ELECT 47μF 25V	
C803	50-76-2020	FXD PLSTC 200PF 250V	
C804	54-00-0311	FXD ELECT 10μF 50V	
C805	50-67-1040	FXD PLSTC 0.022μF 100V	
C807	50-76-2010	FXD PLSTC 100PF 250V	
C808	50-76-2000	FXD PLSTC 51PF 250V	
C809	52-06-3102	FXD CER 10PF 500V	
C810	52-05-2468	FXD CER 0.01μF 50V	
C811	50-67-0060	FXD PLSTC 0.1μF 100V	
C812 *	50-67-0030	FXD PLSTC 0.01μF 100V	
C813	52-05-1498	FXD CER 0.1μF 25V	
C814	52-05-1498	FXD CER 0.1μF 25V	
C815	52-05-1498	FXD CER 0.1μF 25V	
C816	52-06-3125	FXD CER 15PF 500V	
C817	50-67-0060	FXD PLSTC 0.1μF 100V	
C1102	52-05-1498	FXD CER 0.1μF 25V	
C1103	50-76-2020	FXD PLSTC 200PF 250V	
C1105	50-76-2020	FXD PLSTC 200PF 250V	
C1106	50-76-2020	FXD PLSTC 200PF 250V	
C1107	50-76-2040	FXD PLSTC 1000PF 250V	
C1108	50-76-2020	FXD PLSTC 200PF 250V	
C1109	52-05-1498	FXD CER 0.1μF 25V	
C1110	52-05-2468	FXD CER 0.01μF 50V	
C1111	52-02-3466	FXD CER 0.01μF 500V	
C1112	52-05-2468	FXD CER 0.01μF 50V	
C1113	52-05-2468	FXD CER 0.01μF 50V	
C1114	54-00-0121	FXD ELECT 100μF 25V	
C1115	54-00-0121	FXD ELECT 100μF 25V	
C1116	54-00-0121	FXD ELECT 100μF 25V	
C1117	52-05-2468	FXD CER 0.01μF 50V	
C1118	54-00-0022	FXD ELECT 220μF 16V	
C1119	54-00-0022	FXD ELECT 220μF 16V	
CR801	32-10-5880	DIODE Si 30V 0.5A 300mW	TOSHIBA 1S1588
CR802	32-10-5880	DIODE Si	TOSHIBA 1S1588
CR803	32-10-5880	DIODE Si	TOSHIBA 1S1588
CR804	32-10-5880	DIODE Si	TOSHIBA 1S1588

REFERENCE DESIGNATOR	KIKUSUI PARTS NO.	DESCRIPTION	
CR805	32-10-5880	DIODE Si	TOSHIBA 1S1588
CR806	32-10-5880	DIODE Si	TOSHIBA 1S1588
CR807	32-10-5880	DIODE Si	TOSHIBA 1S1588
CR808	32-10-5880	DIODE Si	TOSHIBA 1S1588
CR1102	32-10-5880	DIODE Si	TOSHIBA 1S1588
CR1103	32-90-0230	DIODE ZENER VZ5.8-6.6V	TOSHIBA 0226.2A
K1101	71-08-0060	RELAY DC24V	OMURON MY-4
Q801	30-30-3830	NPN Si	TOSHIBA 2SC383TM
Q803	30-10-4952	PNP Si	TOSHIBA 2SA495G-TM-Y
Q804	30-10-4952	PNP Si	TOSHIBA 2SA495G-TM-Y
Q805	31-20-0302	FET Si N-CH	TOSHIBA 2SK30A-Y
Q806	30-30-4581	NPN Si	HITACHI 2SC458B
Q807	30-31-1241	NPN Si	SONY 2SC1124-2
Q808	30-30-5151	NPN Si	TOSHIBA 2SC515A
Q809	30-30-9001	NPN Si	NEC 2SC900
Q810	30-30-9001	NPN Si	NEC 2SC900
Q811	30-30-9001	NPN Si	NEC 2SC900
Q1101	30-30-9451	NPN Si	NEC 2SC945-Q
Q1102	30-30-9451	NPN Si	NEC 2SC945-Q
Q1103	30-31-9730	NPN Si	MATSUSHITA 2SC1973
Q1104	30-31-9730	NPN Si	MATSUSHITA 2SC1973
Q1105	30-31-1241	NPN Si	SONY 2SC1124-2
Q1106	30-31-1680	NPN Si	TOSHIBA 2SC1168
Q1107	30-31-1680	NPN Si	TOSHIBA 2SC1168
R801	40-27-2393	FXD C FILM 3.9KΩ 5% 1/4W	
R802	40-27-3103	FXD C FILM 10KΩ 5% 1/4W	
R803	40-27-3223	FXD C FILM 22KΩ 5% 1/4W	
R804	40-27-2103	FXD C FILM 1KΩ 5% 1/4W	
R805	40-27-1562	FXD C FILM 560Ω 5% 1/4W	
R806	40-27-3562	FXD C FILM 56KΩ 5% 1/4W	
R807	40-27-2563	FXD C FILM 5.6KΩ 5% 1/4W	
R808	40-27-3272	FXD C FILM 27KΩ 5% 1/4W	
R809	40-27-2562	FXD C FILM 5.6KΩ 5% 1/4W	
R812	40-27-1102	FXD C FILM 100Ω 5% 1/4W	
R813	40-27-2223	FXD C FILM 2.2KΩ 5% 1/4W	
R814	40-27-2333	FXD C FILM 3.3KΩ 5% 1/4W	
R815	40-27-2822	FXD C FILM 8.2KΩ 5% 1/4W	
R816	40-27-2153	FXD C FILM 1.5KΩ 5% 1/4W	
R817	40-27-1103	FXD C FILM 100Ω 5% 1/4W	
R818	40-27-1102	FXD C FILM 100Ω 5% 1/4W	
R819	40-27-3563	FXD C FILM 56KΩ 5% 1/4W	
R820	40-27-1102	FXD C FILM 100Ω 5% 1/4W	

REFERENCE DESIGNATOR	KIKUSUI PARTS NO.	DESCRIPTION
R821	40-27-1152	FXD C FILM 150Ω 5% 1/4W
R822	40-27-1153	FXD C FILM 150Ω 5% 1/4W
R823	40-27-3123	FXD C FILM 12KΩ 5% 1/4W
R824	40-27-1153	FXD C FILM 150Ω 5% 1/4W
R825	40-27-3153	FXD C FILM 15KΩ 5% 1/4W
R826	40-27-1103	FXD C FILM 100Ω 5% 1/4W
R827	40-27-3682	FXD C FILM 68KΩ 5% 1/4W
R828	40-27-3102	FXD C FILM 10KΩ 5% 1/4W
R829	40-27-4152	FXD C FILM 150KΩ 5% 1/4W
R830	40-27-0332	FXD C FILM 33Ω 5% 1/4W
R831	40-27-3103	FXD C FILM 10KΩ 5% 1/4W
R832	40-27-3223	FXD C FILM 22KΩ 5% 1/4W
R833	40-27-2563	FXD C FILM 5.6KΩ 5% 1/4W
R834	40-27-2183	FXD C FILM 1.8KΩ 5% 1/4W
R835	40-27-1103	FXD C FILM 100Ω 5% 1/4W
R836	40-27-2333	FXD C FILM 3.3KΩ 5% 1/4W
R837	40-27-2683	FXD C FILM 6.8KΩ 5% 1/4W
R838	40-27-1223	FXD C FILM 220Ω 5% 1/4W
R839	40-27-2683	FXD C FILM 6.8KΩ 5% 1/4W
R840	40-27-1223	FXD C FILM 220Ω 5% 1/4W
R841	40-27-2683	FXD C FILM 6.8KΩ 5% 1/4W
R842	40-27-2563	FXD C FILM 5.6KΩ 5% 1/4W
R843	40-27-2822	FXD C FILM 8.2KΩ 5% 1/4W
R844	40-27-3562	FXD C FILM 56KΩ 5% 1/4W
R845	40-27-2332	FXD C FILM 3.3KΩ 5% 1/4W
R846	40-27-3153	FXD C FILM 15KΩ 5% 1/4W
R847	40-27-2332	FXD C FILM 3.3KΩ 5% 1/4W
R848	40-27-3103	FXD C FILM 10KΩ 5% 1/4W
R849	40-27-4153	FXD C FILM 150KΩ 5% 1/4W
R1101	40-27-3102	FXD C FILM 10KΩ 5% 1/4W
R1102	42-72-3100	FXD M FILM 10KΩ 1% 1/4W
R1103	42-72-1470	FXD M FILM 470Ω 1% 1/4W
R1104	42-72-1220	FXD M FILM 220Ω 1% 1/4W
R1105	40-27-3103	FXD C FILM 10KΩ 5% 1/4W
R1106	40-27-2562	FXD C FILM 5.6KΩ 5% 1/4W
R1107	40-27-1103	FXD C FILM 100Ω 5% 1/4W
R1108	40-27-1102	FXD C FILM 100Ω 5% 1/4W
R1109	40-27-1103	FXD C FILM 100Ω 5% 1/4W
R1110	40-27-2563	FXD C FILM 5.6KΩ 5% 1/4W
R1111	40-27-1102	FXD C FILM 100Ω 5% 1/4W
R1112	40-27-1103	FXD C FILM 100Ω 5% 1/4W
R1113	40-27-1102	FXD C FILM 100Ω 5% 1/4W
R1114	40-27-1103	FXD C FILM 100Ω 5% 1/4W
R1115	40-27-2563	FXD C FILM 5.6KΩ 5% 1/4W
R1116	40-27-1102	FXD C FILM 100Ω 5% 1/4W
R1117	42-72-0560	FXD M FILM 56Ω 1% 1/4W

REFERENCE DESIGNATOR	KIKUSUI PARTS NO.	DESCRIPTION	
R1118	42-74-2100	FXD M FILM 1KΩ 1% 1/2W	
R1119	42-74-2100	FXD M FILM 1KΩ 1% 1/2W	
R1120	42-74-0560	FXD M FILM 56Ω 1% 1/4W	
R1121	40-37-1471	FXD C FILM 470Ω 5% 1/2W	
R1122	40-27-2152	FXD C FILM 1.5KΩ 5% 1/4W	
R1123	40-27-3122	FXD C FILM 12KΩ 5% 1/4W	
R1124	40-27-1102	FXD C FILM 100Ω 5% 1/4W	
R1125	40-27-1102	FXD C FILM 100Ω 5% 1/4W	
R1126	40-27-1102	FXD C FILM 100Ω 5% 1/4W	
R1127	44-95-3150	FXD M OX 15KΩ 5% 5W	
R1128	44-95-3150	FXD M OX 15KΩ 5% 5W	
R1129	40-27-1102	FXD C FILM 100Ω 5% 1/4W	
R1130	40-11-2562	FXD C FILM 5.6KΩ 5% 1/4W	
R1404	44-91-1150	FXD M OX 150Ω 5% 1W	
R1405	44-91-1150	FXD M OX 150Ω 5% 1W	
U801	35-10-0020	IC QUAD 2-INPUT POSI NAND	TOSHIBA TA3400AP
U802	35-13-0030	IC	TEXAS SN7474N
U803	35-10-0020	IC	TOSHIBA TA3400AP
VR801	48-15-2200	VAR M FILM 2KΩ-B	NOBLE TM10KPVB
VR802	48-15-2500	VAR M FILM 5KΩ-B	NOBLE TM10KPVB
VR1101	48-15-3100	VAR M FILM 10KΩ-B	NOBLE TM10KPVB
VR1102	48-15-1500	VAR M FILM 500Ω-B	NOBLE TM10KPVB
VR1103	48-15-1200	VAR M FILM 200Ω-B	NOBLE TM10KPVB
VR1106	48-15-1200	VAR M FILM 200Ω-B	NOBLE TM10KPVB
A6 PCB-S	90-50-1350	PCB-S A6 TRIGGER MODE	
S1001	81-04-0120	SWITCH PUSH	IWATSU KSD4-12-10 MLDC
A7 PCB-D	90-50-1360	PCB-D A7 SHIELD	
C519	54-00-0311	FXD ELECT 10μF 50V	
C1001	50-67-0060	FXD PLSTC 0.1μF 100V	
Q1001	30-10-4952	PNP Si	TOSHIBA 2SA495G-TM-Y
Q1002	30-30-9451	NPN Si	NEC 2SC945-Q
R348	48-27-2222	FXD C FILM 2.2KΩ 5% 1/4W	
R349	40-27-0102	FXD C FILM 10Ω 5% 1/4W	
R350	40-27-2222	FXD C FILM 2.2KΩ 5% 1/4W	
R351	40-27-0102	FXD C FILM 10Ω 5% 1/4W	

REFERENCE DESIGNATOR	KIKUSUI PARTS NO.	DESCRIPTION	
R521	40-37-0681	FXD C FILM 68Ω 5% 1/2W	
R1001	40-27-0102	FXD C FILM 10Ω 5% 1/4W	
R1002	40-27-0102	FXD C FILM 10Ω 5% 1/4W	
R1003	40-27-0102	FXD C FILM 10Ω 5% 1/4W	
R1004	40-27-3102	FXD C FILM 10KΩ 5% 1/4W	
R1005	40-27-2682	FXD C FILM 6.8KΩ 5% 1/4W	
R1006	40-27-0102	FXD C FILM 10Ω 5% 1/4W	
R1007	40-27-0102	FXD C FILM 10Ω 5% 1/4W	
R1008	40-27-1152	FXD C FILM 150Ω 5% 1/4W	
S1002	-	SEE VR1001 (A PART OF VR1001)	
VR308	45-36-3100	VAR C COMP 10KΩ-B V-POSI	ALPS VM10R15S
VR309	48-15-3100	VAR M FILM 10KΩ-B	NOBLE TM10K PVB
VR310	45-36-3100	VAR C COMP 10KΩ-B V-POSI	ALPS VM10R 15S
VR311	45-15-3100	VAR M FILM 10KΩ-B	NOBLE TM10K PVB
VR1001 WITH S1002	45-01-0240	VAR M FILM 20KΩ-B H-POSI	NOBLE VMBE-UER22
A8 BCB-S	90-50-1790	PCB-S A8 CRT CIRCUIT	
C1203	52-06-3125	FXD CER 15PF 500V	
C1204 *	52-06-3125	FXD CER 15PF 500V	
C1206	52-02-3466	FXD CER 0.01μF 500V	
C1207	52-05-2468	FXD CER 0.01μF 50V	
C1208	52-01-6265	FXD CER 220PF 3KV	
C1209	52-05-2468	FXD CER 0.01μF 50V	
C1210	52-02-3466	FXD CER 0.01μF 500V	
C1211	50-67-0060	FXD PLSTC 0.1μF 100V	
C1212	52-99-1080	FXD CER 4700PF 3KV	
CR1201	32-11-5880	DIODE 30V 0.5A 300mW	TOSHIBA 1S1588
CR1202	32-90-0230	DIODE	TOSHIBA 02Z6.2A
CR1203	32-20-9882	DIODE ZENER VZ130V±5%	KH IN988B
CR1204	32-11-5880	DIODE	TOSHIBA 1S1588
CR1205	32-90-0550	DIODE	HITACHI V11M
CR1206	32-90-1160	DIODE ZENER VZ6.8±0.4V	TOSHIBA 02Z6.8A
Q1201	30-31-0121	NPN Si	MATSUSHITA 2SC1012A
Q1202	30-31-0121	NPN Si	MATSUSHITA 2SC1012A
Q1203	30-30-9950	NPN Si	TOSHIBA 2SC995
R1202	40-27-3102	FXD C FILM 10KΩ 5% 1/4W	
R1203	40-27-2392	FXD C FILM 3.9KΩ 5% 1/4W	

REFERENCE DESIGNATOR	KIKUSUI PARTS NO.	DESCRIPTION	
R1204	40-27-2682	FXD C FILM 6.8KΩ 5% 1/4W	
R1205	40-27-3102	FXD C FILM 10KΩ 5% 1/4W	
R1206	42-72-3680	FXD M FILM 68KΩ 1% 1/4W	
R1207	40-37-3331	FXD C FILM 33KΩ 5% 1/2W	
R1208	40-27-1102	FXD C FILM 100Ω 5% 1/4W	
R1209	40-27-2182	FXD C FILM 1.8KΩ 5% 1/4W	
R1210	42-57-0040	FXD M GLAZE 5MΩ 5% 2W	
R1211	40-27-4222	FXD C FILM 220KΩ 5% 1/4W	
R1212	40-27-5151	FXD C FILM 1.5MΩ 5% 1/4W	
R1213	40-37-5151	FXD C FILM 1.5MΩ 5% 1/2W	
R1214	42-57-0050	FXD M GLAZE 6.8MΩ 5% 2W	
R1215	42-72-3150	FXD M FILM 15KΩ 1% 1/4W	
R1216	40-27-3222	FXD C FILM 22KΩ 5% 1/4W	
VR1203	45-23-2100	VAR C COMP 1KΩ-B	
VR1204	45-23-2500	VAR C COMP 5KΩ-B	
A9 PCB-S	90-50-1380	PCB-S A9 HIGH VOLTAGE	
C1301	52-05-2468	FXD CER 0.01μF 50V	
C1302	52-05-2468	FXD CER 0.01μF 50V	
C1303	54-00-0314	FXD ELECT 47μF 50V	
C1304	50-67-0060	FXD PLSTC 0.1μF 100V	
C1305	50-67-0060	FXD PLSTC 0.1μF 100V	
C1306	52-99-1080	FXD CER 4700PF 3KV	
C1307	52-99-1080	FXD CER 4700PF 3KV	
C1308	52-99-1080	FXD CER 4700PF 3KV	
CR1301	32-11-5880	DIODE Si	TOSHIBA 1S1588
CR1302	32-90-1420	DIODE Si HV	FUJIDENKI ESJA35-12
CR1303	32-90-0550	DIODE Si	HITACHI V11M
CR1304	32-90-0550	DIODE Si	HITACHI V11M
CR1305	32-90-1420	DIODE Si HV	FUJIDENKI ESJA35-12
Q1301	30-30-9001	TR Si	NEC 2SC900
Q1302	30-10-4952	TR Si	TOSHIBA 2SA495G-TM-Y
Q1303	30-40-3811	TR Si	NEC 2SD381-L
R1301	40-27-3562	FXD C FILM 56KΩ 5% 1/4W	
R1302	40-27-3102	FXD C FILM 10KΩ 5% 1/4W	
R1303	40-27-1102	FXD C FILM 100Ω 5% 1/4W	
R1304	40-27-3152	FXD C FILM 15KΩ 5% 1/4W	
R1305	40-27-1562	FXD C FILM 560Ω 5% 1/4W	
R1306	40-27-1102	FXD C FILM 100Ω 5% 1/4W	
R1308	42-72-3680	FXD M FILM 68KΩ 1% 1/4W	
R1309	40-27-2102	FXD C FILM 1KΩ 5% 1/4W	

REFERENCE DESIGNATOR	KIKUSUI PARTS NO.	DESCRIPTION	
R1310	40-27-2822	FXD C FILM 8.2KΩ 5% 1/4W	
R1311	40-27-1102	FXD C FILM 100Ω 5% 1/4W	
R1312	40-27-0102	FXD C FILM 10Ω 5% 1/4W	
R1313	40-27-0102	FXD C FILM 10Ω 5% 1/4W	
R1314	40-27-2332	FXD C FILM 3.3KΩ 5% 1/4W	
T1301	63-92-0060	HV TRANS DC-DC CONVERTER	KIKUSUI S7510934
VR1301	45-23-3200	VAR C COMP 20KΩ	NOBLE V18K3-24USB 20KΩ
A10 PCB-D	90-50-1530	PCB-D A10 POWER SUPPLY	
C1402	54-81-1000	FXD ELECT 100μF 315V	
C1404	50-76-2030	FXD PLSTC 510PF 250V	
C1405	54-00-0231	FXD ELECT 1000μF 35V	
C1406	54-00-0231	FXD ELECT 1000μF 35V	
C1407	52-05-1498	FXD CER 0.1μF 25V	
C1409	52-02-3466	FXD CER 0.01μF 500V	
C1410	54-00-0031	FXD ELECT 1000μF 16V	
C1411	54-00-0121	FXD ELECT 100μF 25V	
C1412	50-67-0060	FXD PLSTC 0.1μF 100V	
C1413	54-00-0314	FXD ELECT 47μF 50V	
C1416	54-01-0321	FXD ELECT 100μF 50V	
CR1402	32-90-0550	DIODE Si	HITACHI V11M
CR1403	32-90-0550	DIODE Si	
CR1404	32-90-0550	DIODE Si	
CR1405	32-90-0550	DIODE Si	
CR1406	32-90-0523	DIODE Si 600V 1A	TOSHIBA S5277J
CR1407	32-90-0523	DIODE Si	
CR1408	32-90-0523	DIODE Si	
CR1409	32-90-0523	DIODE Si	
CR1410	32-11-5880	DIODE Si 30V 0.5A 300mW	TOSHIBA 1S1588
CR1411	32-91-0090	DIODE ZENER VZ10.4-11.6V	NEC RD11E-B
CR1412	32-11-5880	DIODE Si	TOSHIBA 1S1588
CR1413	32-90-0790	DIODE BRIDGE VRM200V 1A	SHINDENGEN S1RBA20
Q1401	30-30-3722	NPN Si	TOSHIBA 2SC372G-TM-Y
Q1402	30-10-4952	PNP Si	TOSHIBA 2SA495G-TM-Y
Q1403	30-10-4952	PNP Si	TOSHIBA 2SA495G-TM-Y
R1401	40-27-2102	FXD C FILM 1KΩ 5% 1/4W	
R1402	40-27-2392	FXD C FILM 3.9KΩ 5% 1/4W	

REFERENCE DESIGNATOR	KIKUSUI PARTS NO.	DESCRIPTION	
R1403	40-27-0102	FXD C FILM 10Ω 5% 1/4W	
R1405	40-37-0101	FXD C FILM 10Ω 5% 1/2W	
R1406	40-37-0101	FXD C FILM 10Ω 5% 1/2W	
R1407	40-37-0101	FXD C FILM 10Ω 5% 1/2W	
R1408	40-72-2330	FXD M FILM 3.9KΩ 1% 1/4W	
R1409	40-72-2330	FXD M FILM 3.9KΩ 1% 1/4W	
R1410	40-27-3102	FXD C FILM 10KΩ 5% 1/4W	
R1411	40-37-0101	FXD C FILM 10Ω 5% 1/2W	
R1412	40-37-0101	FXD C FILM 10Ω 5% 1/2W	
R1413	40-37-0101	FXD C FILM 10Ω 5% 1/2W	
R1414	42-74-3100	FXD M FILM 10KΩ 1% 1/2W	
R1415	42-74-3100	FXD M FILM 10KΩ 1% 1/2W	
R1416	40-27-2102	FXD C FILM 1KΩ 5% 1/4W	
U1401	34-40-0000	IC VOLTAGE REGU.	NS LM723CH
U1402	34-00-0020	IC OPERATIONAL AMP.	NS LM741CH
U1403	34-40-0000	IC VOLTAGE REGU.	NEC UPC14305
VR1403	48-14-2100	VAR M FILM 1KΩ	NOBLE TM10K PH
A13 PCB-S	90-50-1480	PCB-S A13 STR MODE	
C1517	54-00-0304	FXD ELECT 4.7μF 50V	
R1501	40-27-2332	FXD C FILM 3.3KΩ 5% 1/4W	
R1502	40-27-1562	FXD C FILM 560Ω 5% 1/4W	
R1503	40-27-2152	FXD C FILM 1.5KΩ 5% 1/4W	
R1504	42-24-0231	FXD M GLAZE 5MΩ 1% 0.315W	
S1501	81-05-0080	SWITCH PUSH DISPLAY MODE	IWATSU KSD5-14-10 MLDC
-	97-04-0010	TIMER	FUJI CERAMICS TYPE TM-3
A14 PCB-D	90-50-1490	PCB-D A14 STRAGE	
C1501	54-80-1000	FXD ELECT 3.3μF 350V	
C1502	54-80-1000	FXD ELECT 3.3μF 350V	
C1503	54-01-0132	FXD ELECT 2200μF 25V	
C1504	54-00-0114	FXD ELECT 47μF 25V	
C1505	52-05-1498	FXD CER 0.1μF 25V	
C1506	54-00-0114	FXD ELECT 47μF 25V	
C1507	52-05-1498	FXD CER 0.1μF 25V	
C1508	54-00-0114	FXD ELECT 47μF 25V	
C1509	52-05-1498	FXD CER 0.1μF 25V	
C1510	52-05-1498	FXD CER 0.1μF 25V	
C1512	52-05-2468	FXD CER 0.01μF 50V	

REFERENCE DESIGNATOR	KIKUSUI PARTS NO.	DESCRIPTION	
C1513	52-05-2468	FXD CER 0.01μF 50V	
C1515	52-05-2468	FXD CER 0.01μF 50V	
C1516	52-02-3466	FXD CER 0.01μF 500V	
C1517	53-87-0040	FXD OIL PAPER 0.1μF 400V	
C1601	54-00-0121	FXD ELECT 100μF 25V	
C1602	50-67-0030	FXD PLSTC 0.01μF 100V	
C1603	50-67-0030	FXD PLSTC 0.01μF 100V	
C1605	54-00-0312	FXD ELECT 22μF 50V	
C1606	52-05-2468	FXD CER 0.01μF 50V	
C1607	50-67-0030	FXD PLSTC 0.01μF 100V	
C1608	50-67-0060	FXD PLSTC 0.1μF 100V	
C1609	52-05-2468	FXD CER 0.01μF 50V	
C1610	54-01-0304	FXD ELECT 4.7μF 50V	
C1611	50-67-0060	FXD PLSTC 0.1μF 100V	
C1612	50-67-0030	FXD PLSTC 0.01μF 100V	
C1613	54-01-0304	FXD ELECT 4.7μF 50V	
C1614	52-05-2468	FXD CER 0.01μF 50V	
C1615	50-67-0030	FXD PLSTC 0.01μF 100V	
C1616	54-01-0304	FXD ELECT 4.7μF 50V	
C1617	52-05-2468	FXD CER 0.01μF 50V	
C1618	54-00-0114	FXD ELECT 47μF 25V	
C1620	52-05-2468	FXD CER 0.01μF 50V	
C1621	50-67-0030	FXD PLSTC 0.01μF 100V	
CR1501	32-90-0550	DIODE Si	HITACHI V11M
CR1502	32-90-0550	DIODE Si	HITACHI V11M
CR1503	32-90-0790	DIODE BRIDGE	SHINDENGEN SIRBA20
CR1504	32-90-0790	DIODE BRIDGE	
CR1601	32-11-5880	DIODE 30V 0.5A 300mW	TOSHIBA 1S1588
CR1602	32-11-5880	DIODE	TOSHIBA 1S1588
CR1603	32-11-5880	DIODE	TOSHIBA 1S1588
CR1604	32-11-5880	DIODE	TOSHIBA 1S1588
CR1605	32-11-5880	DIODE	TOSHIBA 1S1588
CR1606	32-11-5880	DIODE	TOSHIBA 1S1588
CR1607	32-11-5880	DIODE	TOSHIBA 1S1588
CR1608	32-90-0230	DIODE ZENER	TOSHIBA 02Z6.2A
Q1501	30-40-3811	NPN Si	NEC 2SD381-L
Q1502	30-31-5051	NPN Si	NEC 2SC1505-K
Q1503	30-31-5051	NPN Si	NEC 2SC1505-K
Q1504	30-30-9451	NPN Si	NEC 2SC945-Q

REFERENCE DESIGNATOR	KIKUSUI PARTS NO.	DESCRIPTION	
Q1601	30-40-3811	NPN Si	NEC 2SD381-L
Q1602	30-30-9451	NPN Si	NEC 2SC945-Q
Q1603	30-31-5051	NPN Si	NEC 2SC945-Q
Q1604	30-31-5051	NPN Si	NEC 2SC945-Q
Q1605	30-31-5051	NPN Si	NEC 2SC945-Q
Q1606	30-31-5051	NPN Si	NEC 2SC945-Q
Q1607	30-31-5051	NPN Si	NEC 2SC945-Q
Q1608	30-31-5051	NPN Si	NEC 2SC945-Q
Q1609	30-31-5051	NPN Si	NEC 2SC945-Q
Q1610	30-31-5051	NPN Si	NEC 2SC945-Q
Q1611	30-31-5051	NPN Si	NEC 2SC945-Q
Q1612	30-31-5051	NPN Si	NEC 2SC945-Q
Q1613	30-31-5051	NPN Si	NEC 2SC945-Q
Q1614	30-31-5051	NPN Si	NEC 2SC945-Q
Q1615	30-31-5051	NPN Si	NEC 2SC1505-K
Q1616	30-31-5051	NPN Si	NEC 2SC1505-K
R1504	40-27-3822	FXD C FILM 82KΩ 5% 1/4W	
R1505	40-27-4222	FXD C FILM 220KΩ 5% 1/4W	
R1506	40-27-1562	FXD C FILM 560Ω 5% 1/4W	
R1507	44-92-2560	FXD M OX 5.6KΩ 5% 2W	
R1508	40-27-3332	FXD C FILM 33KΩ 5% 1/4W	
R1509	40-27-4681	FXD C FILM 680KΩ 5% 1/4W	
R1510	40-27-3472	FXD C FILM 47KΩ 5% 1/4W	
R1511	40-27-4222	FXD C FILM 220KΩ 5% 1/4W	
R1601	40-27-2562	FXD C FILM 5.6KΩ 5% 1/4W	
R1602	40-27-1562	FXD C FILM 560Ω 5% 1/4W	
R1603	40-27-2102	FXD C FILM 1KΩ 5% 1/4W	
R1604	40-27-2102	FXD C FILM 1KΩ 5% 1/4W	
R1605	40-27-3222	FXD C FILM 22KΩ 5% 1/4W	
R1606	40-27-2102	FXD C FILM 1KΩ 5% 1/4W	
R1607	40-27-3102	FXD C FILM 10KΩ 5% 1/4W	
R1608	40-27-3102	FXD C FILM 10KΩ 5% 1/4W	
R1609	40-27-3152	FXD C FILM 15KΩ 5% 1/4W	
R1610	40-27-3102	FXD C FILM 10KΩ 5% 1/4W	
R1611	40-27-3102	FXD C FILM 10KΩ 5% 1/4W	
R1612	40-27-3152	FXD C FILM 15KΩ 5% 1/4W	
R1613	40-27-3102	FXD C FILM 10KΩ 5% 1/4W	
R1614	40-27-3222	FXD C FILM 22KΩ 5% 1/4W	
R1615	40-27-2682	FXD C FILM 6.8KΩ 5% 1/4W	
R1616	40-27-2562	FXD C FILM 5.6KΩ 5% 1/4W	
R1617	40-27-3102	FXD C FILM 10KΩ 5% 1/4W	
R1619	40-27-3472	FXD C FILM 4.7KΩ 5% 1/4W	

REFERENCE DESIGNATOR	KIKUSUI PARTS NO.	DESCRIPTION
R1621	40-27-3332	FXD C FILM 33KΩ 5% 1/4W
R1622	40-27-4222	FXD C FILM 220KΩ 5% 1/4W
R1623	40-27-3102	FXD C FILM 10KΩ 5% 1/4W
R1624	40-27-3102	FXD C FILM 10KΩ 5% 1/4W
R1625	40-27-3152	FXD C FILM 15KΩ 5% 1/4W
R1626	40-27-3822	FXD C FILM 82KΩ 5% 1/4W
R1627	40-27-3222	FXD C FILM 22KΩ 5% 1/4W
R1628	40-27-2102	FXD C FILM 1KΩ 5% 1/4W
R1629	40-27-3102	FXD C FILM 10KΩ 5% 1/4W
R1630	40-27-3152	FXD C FILM 15KΩ 5% 1/4W
R1631	40-27-2562	FXD C FILM 5.6KΩ 5% 1/4W
R1632	40-27-2222	FXD C FILM 22KΩ 5% 1/4W
R1633	40-27-2562	FXD C FILM 5.6KΩ 5% 1/4W
R1634	40-27-1332	FXD C FILM 330Ω 5% 1/4W
R1635	40-27-2222	FXD C FILM 2.2KΩ 5% 1/4W
R1636	40-27-2102	FXD C FILM 1KΩ 5% 1/4W
R1637 *	40-27-3332	FXD C FILM 33KΩ 5% 1/4W
R1638	40-27-3222	FXD C FILM 22KΩ 5% 1/4W
R1639	40-27-3822	FXD C FILM 82KΩ 5% 1/4W
R1640	40-27-3152	FXD C FILM 15KΩ 5% 1/4W
R1641	40-27-3222	FXD C FILM 22KΩ 5% 1/4W
R1642	40-27-3332	FXD C FILM 33KΩ 5% 1/4W
R1643	40-27-2332	FXD C FILM 3.3KΩ 5% 1/4W
R1644	40-27-2102	FXD C FILM 1KΩ 5% 1/4W
R1645	40-27-2102	FXD C FILM 1KΩ 5% 1/4W
R1646	40-27-2562	FXD C FILM 5.6KΩ 5% 1/4W
R1647	40-27-3102	FXD C FILM 10KΩ 5% 1/4W
R1648	40-27-3102	FXD C FILM 10KΩ 5% 1/4W
R1649	40-27-2392	FXD C FILM 3.9KΩ 5% 1/4W
R1650	40-27-4222	FXD C FILM 220KΩ 5% 1/4W
R1651	40-27-4152	FXD C FILM 150KΩ 5% 1/4W
R1652	40-27-2562	FXD C FILM 5.6KΩ 5% 1/4W
R1660	40-27-4102	FXD C FILM 100KΩ 5% 1/4W
R1661	44-92-0332	FXD M OX 33Ω 5% 2W
U1601	35-10-0150	IC QUAD 2-INPUT NAND GATE SN74LS00N
U1602	35-10-0150	IC SN74LS00N
U1603	35-10-0020	IC TOSHIBA TD3473AP
U1604	34-90-0010	IC TIMER NS LM555CN
U1605	34-90-0010	IC TIMER NS LM555CN
U1606	34-90-0010	IC TIMER NS LM555CN
U1607	34-90-0010	IC TIMER NS LM555CN
VR1601	45-36-5100	VAR C COMP 1MΩ-B ALPS VM10R 15S
VR1602	48-26-1470	VAR M GLAZE 470Ω-B ALPS CR19R

REFERENCE DESIGNATOR	KIKUSUI PARTS NO.	DESCRIPTION	
VR1603	45-36-2100	VAR C COMP 1KΩ-B	ALPS VM10R15S
VR1604	48-26-2500	VAR M GLAZE 5KΩ-B	ALPS CR19R
VR1605	48-26-3100	VAR M GLAZE 10KΩ-B	ALPS CR19R
VR1606	48-26-4220	VAR M GLAZE 220KΩ-B	ALPS CR19R
VR1607	48-26-4220	VAR M GLAZE 220KΩ-B	ALPS CR19R
VR1608	46-20-4201	VAR M GLAZE 200KΩ	HOKURIKU RG161N15S
VR1609	46-20-4201	VAR M GLAZE 200KΩ	HOKURIKU RG161N15S

REFERENCE DESIGNATOR	KIKUSUI PARTS NO.	DESCRIPTION	
OTHER THAN DC BOARD			
C901	50-63-3500	FXD PLSTC 1μF 1% 200V	
C902	50-63-3510	FXD PLSTC 0.1μF 1% 200V	
C903	50-73-3500	FXD PLSTC 0.01μF 1% 200V	
C904	50-63-2510	FXD PLSTC 1000PF 1% 125V	
C905	50-77-2020	FXD PLSTC 20PF 250V	
C906	57-00-1010	VAR AIR 2.3-35PF	
C907	52-06-3215	FXD CER 82PF 500V	
C909	57-00-1010	VAR AIR 2.3-35PF	
C910	52-06-3215	FXD CER 82PF 500V	
C911	54-00-0312	FXD ELECT 22μF 50V	
C912	54-29-1080	FXD ELECT 1μF 50V	
C913	50-67-0060	FXD PLSTC 0.1μF 100V	
C914	50-67-0040	FXD PLSTC 0.022μF 100V	
C915	50-67-0020	FXD PLSTC 0.0047μF 100V	
C916	50-63-3500	FXD PLSTC 1μF 1% 200V	
C1401	58-82-1040	FXD ELECT 220μF 315V	
C1414	52-77-1000	FXD CER 1000PF 250V AC	
C1415	52-77-1000	FXD CER 1000PF 250V AC	
CR1001	37-00-0070	LED LAMP RED	TLR-105
CR1401	37-00-0060	LED LAMP GREEN	TLG-105
DS1501	23-05-0030	LAMP 6.3V 200mA	
F1401	99-02-0101	FUSE 1A 250V S.B	
L1201	66-21-0060	ROTATION COIL	KIKUSUI S-7901413
Q1404	30-40-3811	TR NPN Si	NEC 2SD381-L
Q1405	30-40-3811	TR NPN Si	NEC 2SD381-L
Q1406	30-20-5361	TR PNP Si	NEC 2SB536
R901	42-24-0231	FXD M GLAZE 5MΩ 1% 0.315W	
R902	42-24-0221	FXD M GLAZE 2MΩ 1% 0.315W	
R903	42-73-5100	FXD C FILM 1MΩ 0.5% 1/2W	
R904	42-74-4500	FXD C FILM 500KΩ 1% 1/2W	
R905	42-74-4200	FXD C FILM 200KΩ 1% 1/2W	
R906	42-74-4100	FXD C FILM 100KΩ 1% 1/2W	
R907	42-74-3500	FXD C FILM 50KΩ 1% 1/2W	
R908	42-24-0231	FXD M GLAZE 5MΩ 1% 0.315W	
R909	40-27-3102	FXD C FILM 10KΩ 5% 1/4W	
S101	80-11-4031	SWITCH ROTARY (V/DIV) WITH VR304 500Ω	KIKUSUI NO.1137
S201	80-11-4031	SWITCH ROTARY (V/DIV) WITH VR404 500Ω	KIKUSUI NO.1137

REFERENCE DESIGNATOR	KIKUSUI PARTS NO.	DESCRIPTION	
S901	80-20-5020	SWITCH ROTARY (TIME/DIV)	KIKUSUI NO.2018
T1401	60-49-0016	P.T 5516ST	KIKUSUI S-392331
V1201	21-11-0514	CRT	TOSHIBA E2827B1
VR101	45-16-3201	VAR C COMP 20KΩ-B (DC BAL)	NOBLE V12M4-1 6×5N 15SB
VR201	45-16-3201	VAR C COMP 20KΩ-B (DC BAL)	
VR305	45-16-1500	VAR C COMP 500Ω-B (CAL)	NOBLE V12M4-1 6×5N 15SB
VR405	45-16-1500	VAR C COMP 500Ω-B (CAL)	
VR901	45-01-0220	VAR C COMP 20KΩ-B (HOR VAR)	NOBLE V16L4S15SB
VR1501	45-01-0262	VAR C COMP 2KΩ-B WITH SWITCH (POWER-ILLUM)	
VR1402	47-13-1500	VAR W.W 500Ω-B (ROTATION)	NOBLE RA25YN15S

REFERENCE DESIGNATOR	KIKUSUI PARTS NO.	DESCRIPTION	
OTHERS			
KNOB	N1-000-011	BLACK INTEN KNOB,ETC.	KIKUSUI R12SB
KNOB	N1-000-051	BLACK VOLTS/DIV KNOB, ETC.	KIKUSUI D22WB
KNOB	N2-000-011	RED V/DIV VAR KNOB,ETC.	KIKUSUI R12WR
PUSH BUTTON			
	P2-000-211	BLUE X-Y KNOB, ETC.	
	P2-050-081	BLUE DUAL KNOB, ETC.	
BEZEL	P2-050-092	BEZEL SQUARE 5 INCH	
SCALE PLATE			
	S3-050-101	SCALE PLATE	
FILTER	S4-050-071	FILTER SCREEN	
PROBE	89-03-0180	PROBE 1m	KIKUSUI MODEL 959A BNC
TERMINAL ADAPTOR			
	W4-986-011	TERMINAL ADAPTOR	KIKUSUI MODEL 942A
FUSE HOLDER			
	84-51-0000	FUSE HOLDER	MIYAMA AF007-A02

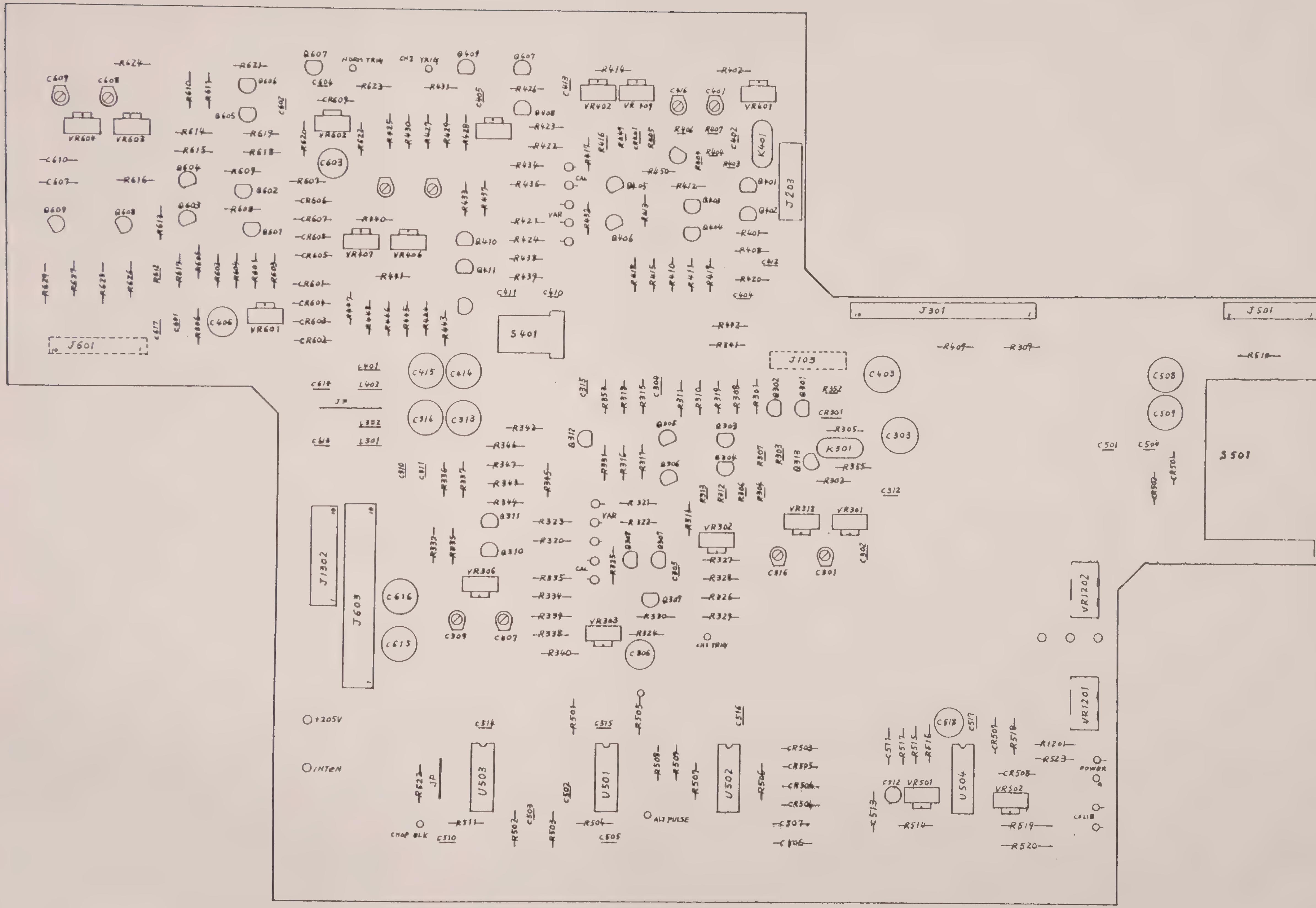

PC BOARD A2 VERTICAL

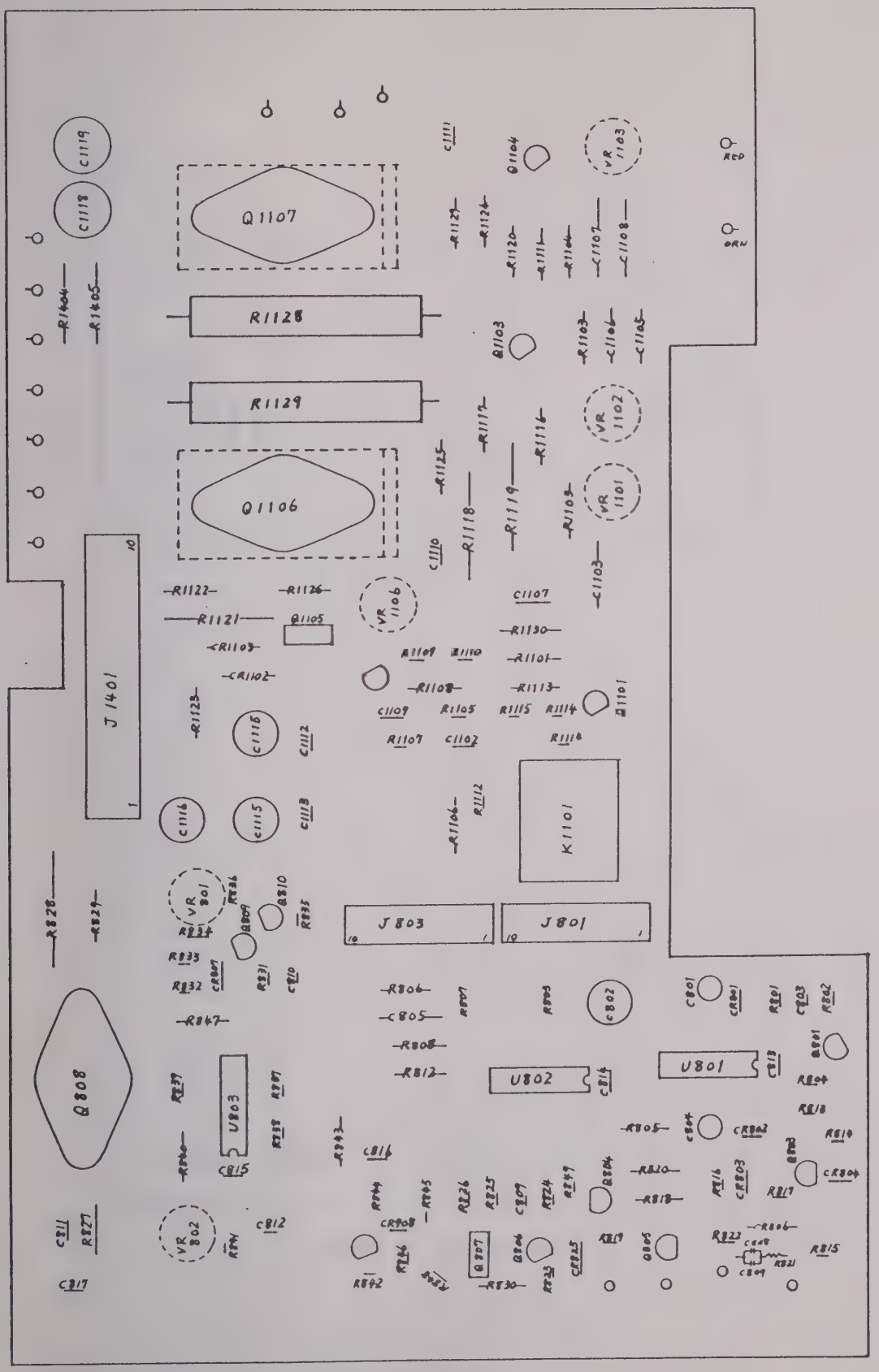

PC BOARD A5 HORIZONTAL

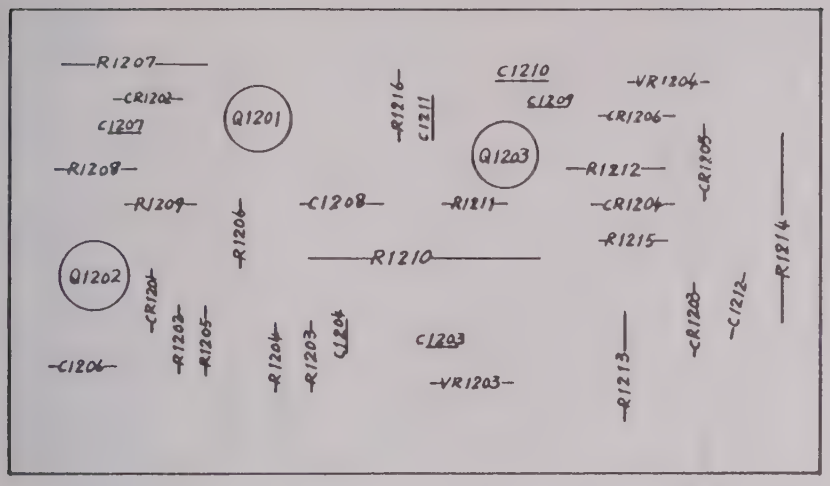

PC BOARD A8 CRT CIRCUIT

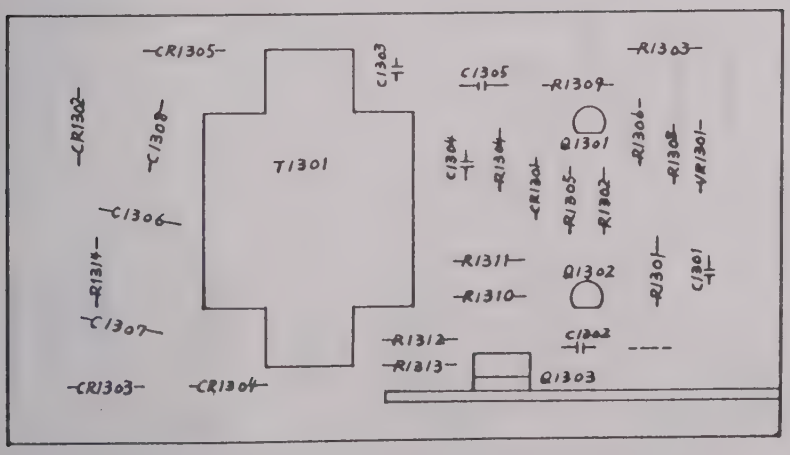

PC BOARD A9 HIGH VOLTAGE

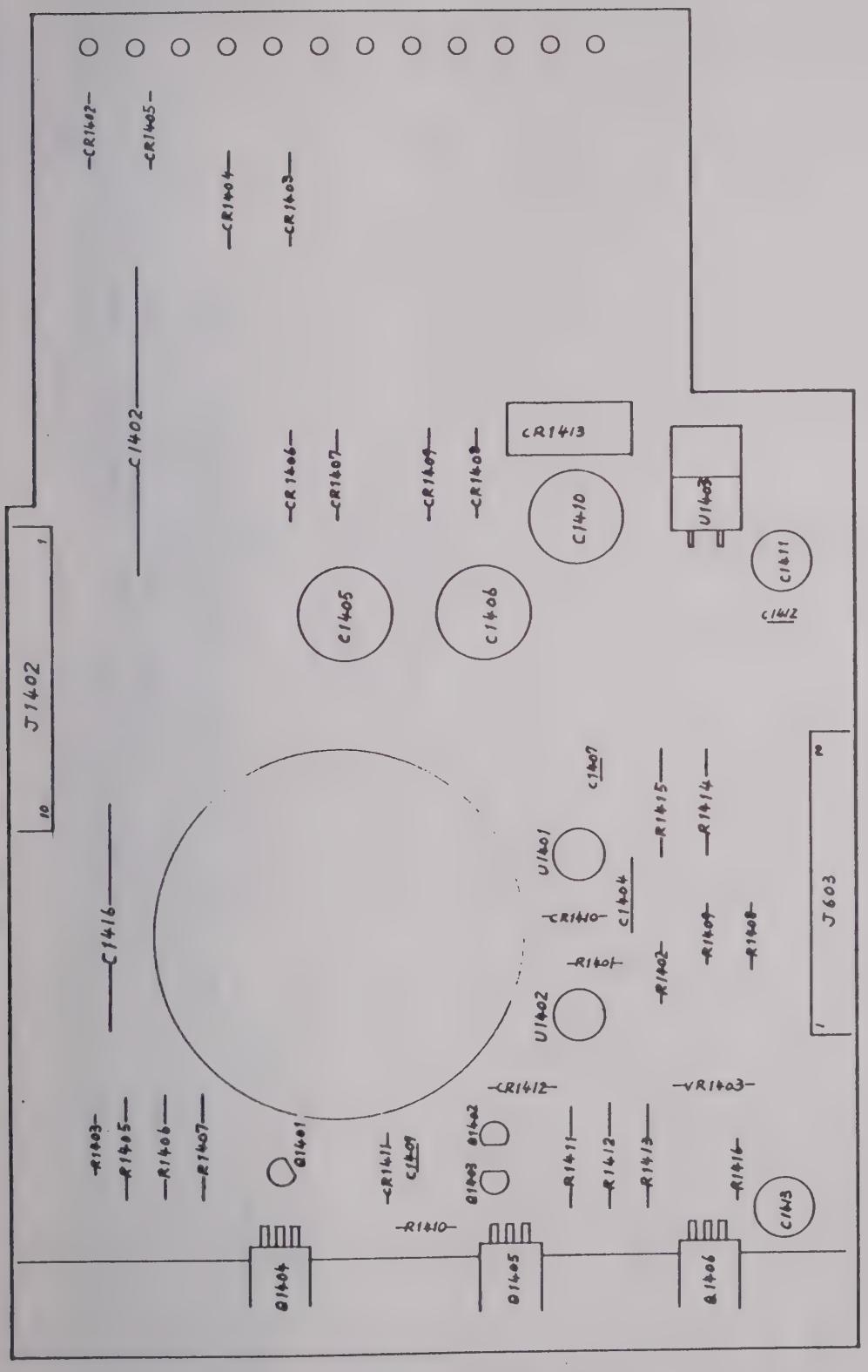

PC BOARD A10 POWER SUPPLY

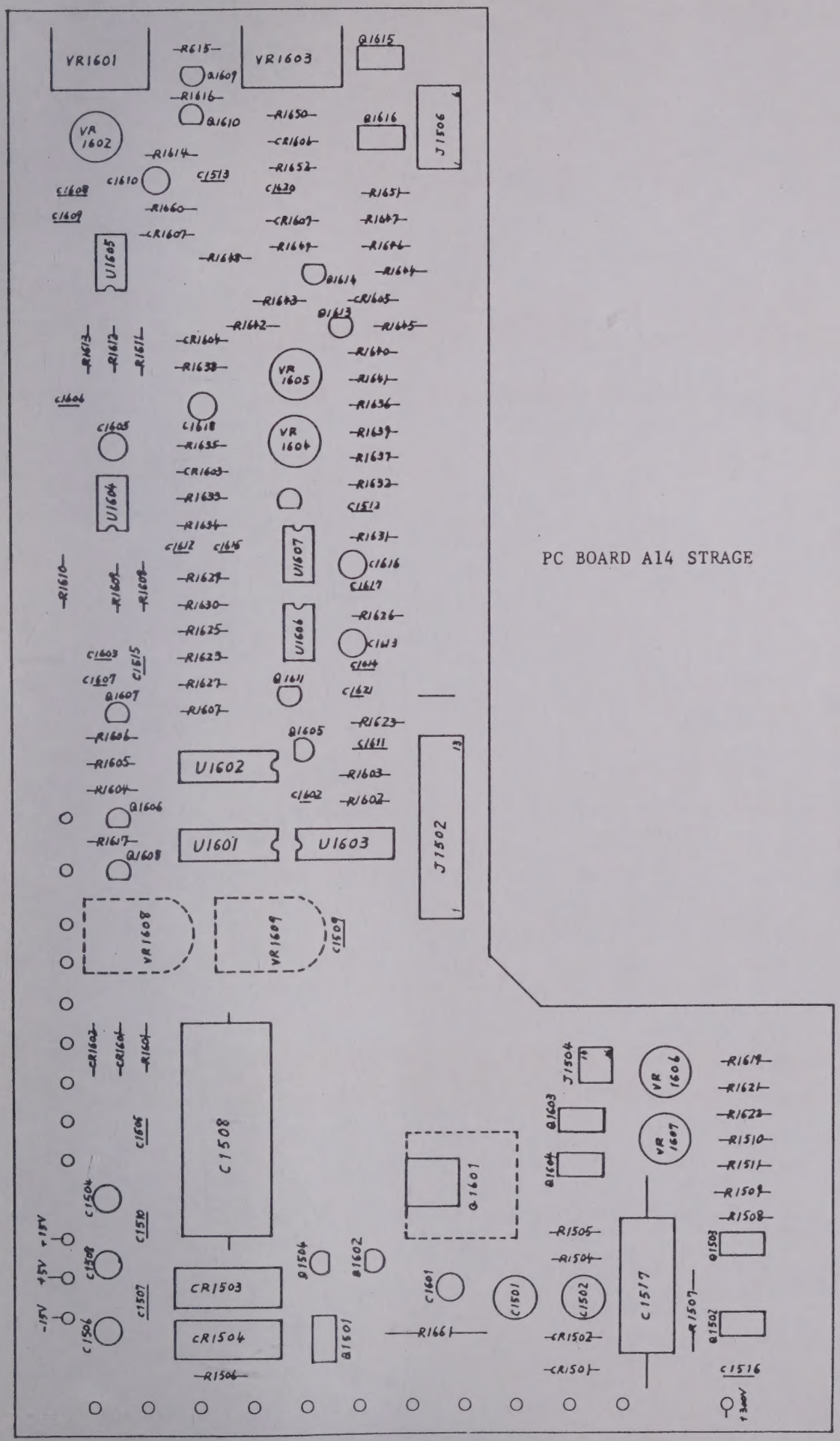

PC BOARD A14 STRAGE

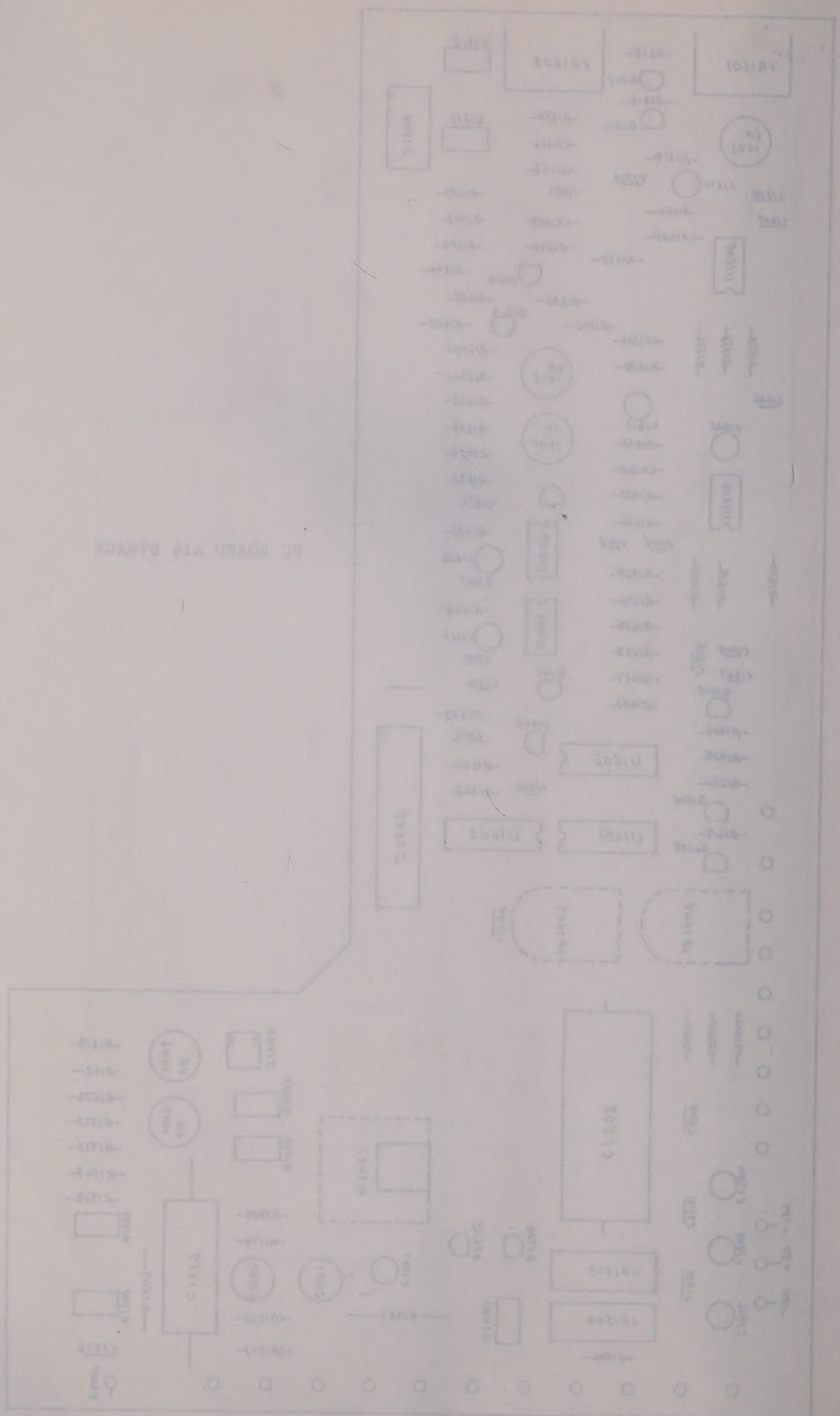

LIMITED WARRANTY

All instruments sold by KIKUSUI INTERNATIONAL CORPORATION are warranted to the original purchaser against defects in materials and workmanship from the date of original shipment to the purchaser within the following time limits:

Oscilloscope	—	2 year limited warranty
Power Supply	—	5 year limited warranty
Test Instrument	—	1 year limited warranty

However, this warranty excludes accessories, batteries, lead wires, and probes. Also, this warranty does not apply to any instruments determined by KIKUSUI INTERNATIONAL CORPORATION to have been subjected to customer alteration, modification, negligence or misuse.

In the event of any defects determined by KIKUSUI INTERNATIONAL CORPORATION to be covered by this warranty, KIKUSUI INTERNATIONAL CORPORATION will, at its sole option, repair or replace the defective instrument without charge and at its expense reship anywhere in the United States. To obtain warranty service, the defective instrument must be returned within thirty (30) days after the expiration of the applicable warranty period to KIKUSUI INTERNATIONAL CORPORATION or an Authorized Warranty Repair Station, properly packaged and with transportation and insurance prepaid. This warranty is valid only in the United States of America. Any customers of KIKUSUI INTERNATIONAL CORPORATION located outside of the United States should check with their nearest Authorized Agent for warranty information applicable to them.

EXCEPT AS SET FORTH ABOVE, KIKUSUI INTERNATIONAL CORPORATION MAKES NO WARRANTIES EITHER EXPRESS OR IMPLIED INCLUDING WITHOUT LIMITATION ANY WARRANTY OF MERCHANTABILITY OR FITNESS FOR ANY PARTICULAR USE OR PURPOSE, WITH RESPECT TO SUCH INSTRUMENTS, AND SHALL NOT BE LIABLE OR RESPONSIBLE FOR ANY INCIDENTAL OR CONSEQUENTIAL DAMAGES.

Kikusui International Corp.

17819 S. Figueroa St., Gardena, Ca. 90248 (213) 515-6432 TWX910-346-7648 KIKUSUI GDNA